SIEMENS
Ingenuity for life

What’s new in NX

Unrestricted © Siemens AG 2020

SIEMENS
Ingenuity for life

The latest updates to NX enable users to create better designs faster, with greater confidence

Achieve cutting edge innovation with tools built from the ground-up as the next step in design evolution.

Create better designs faster by naturally capturing ideas as you iterate.

Create designs quickly and with confidence.

Integrate the latest communication tools across your teams to enhance design understanding and decrease time to market.

NX: Breaking down the barriers to innovation

SIEMENS
Ingenuity for life

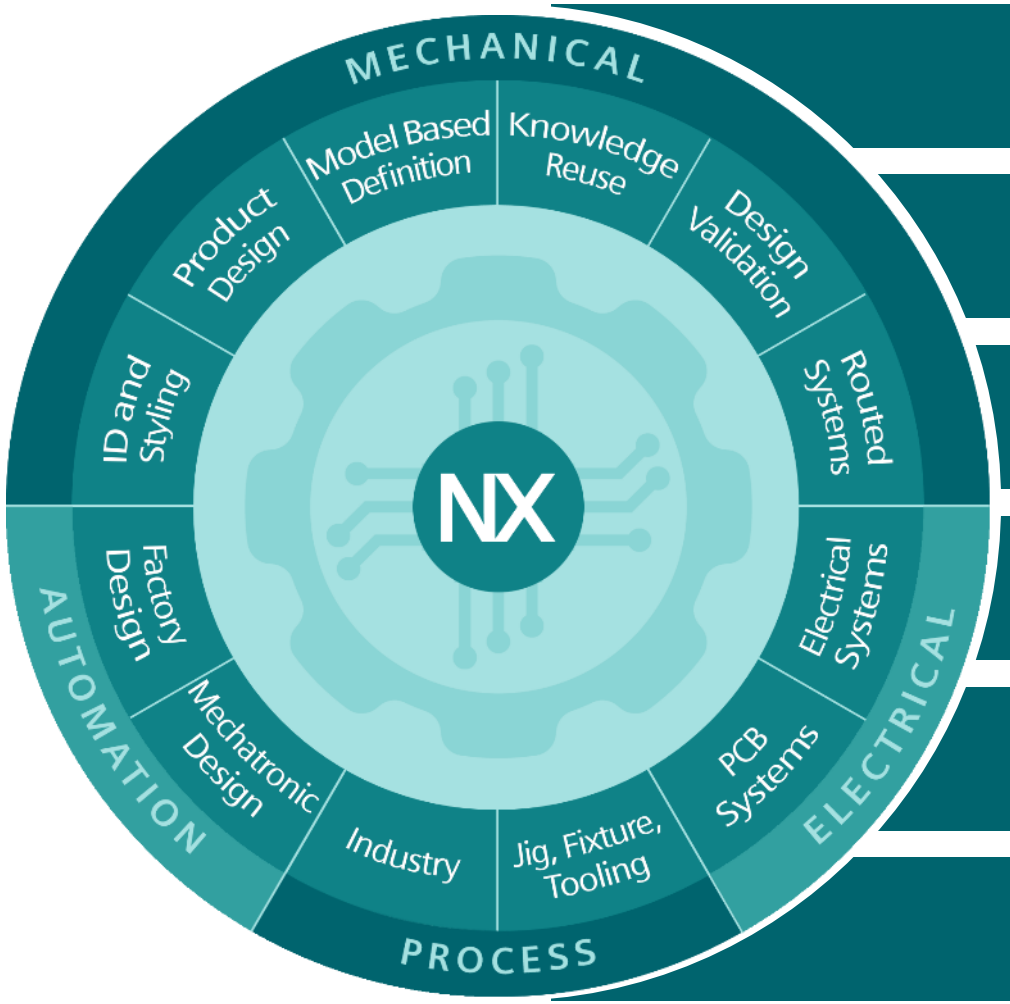

Most Productive Modeling Environment

Generative Engineering

Industrialized Additive Manufacturing

Electromechanical Design

Collaborative Design and Management

Integrated Simulation and Manufacturing

Unrestricted © Siemens AG 2020

NX: Breaking down the barriers to innovation

SIEMENS
Ingenuity for life

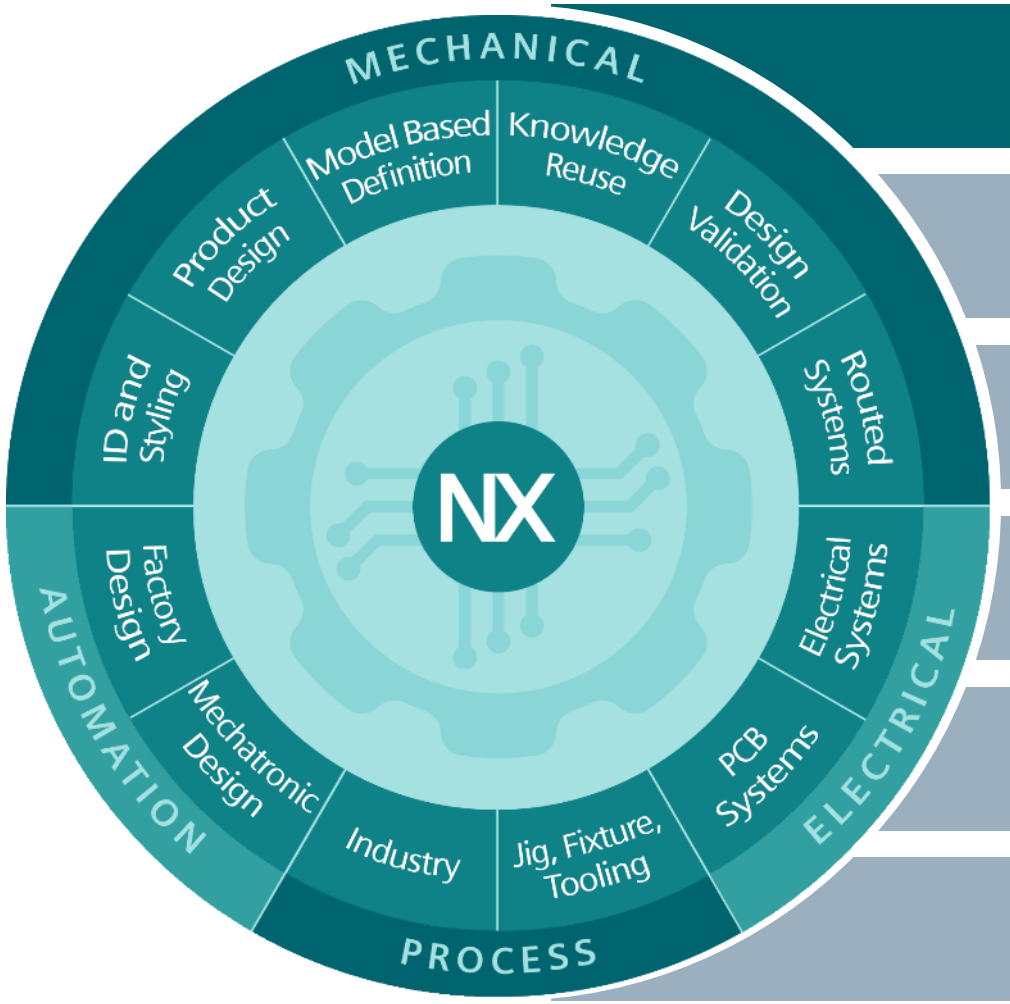

Most Productive Modeling Environment

Generative Engineering

Industrialized Additive Manufacturing

Electromechanical Design

Collaborative Design and Management

Integrated Simulation and Manufacturing

Unrestricted © Siemens AG 2020

Most Productive Modeling Environment

SIEMENS
Ingenuity for life

Our ongoing commitment to core modeling technology investments provides the world's most productive modeling environment.

Unrestricted © Siemens AG 2020

Most Productive Modeling Environment

SIEMENS
Ingenuity for life

Capture ideas like never before with new design approach

Simplified workflows and assembly creation

Create designs faster with Structure Designer

Intuitive NX Join classification

- Innovations in Sketch capabilities, plus enhanced tools for faster design creation, allow users to
- iterate digitally at a higher level than ever before.

- Simplified assembly creation and reduction in typical exploded view workflows.

- Spend less time re-designing and more time
- making quality-driven iterations.

- Reduced the time necessary to place and define fasteners and hardware.

Unrestricted © Siemens AG 2020

Design

SIEMENS
Ingenuity for life

This release continues to deliver numerous new and improved core modeling capabilities, improving daily user productivity and workflow efficiency.

- New Sketch experience
- Enhancements to several core workflow commands: Extrude, Hole, Thread, Pattern, Boolean, Model Compare

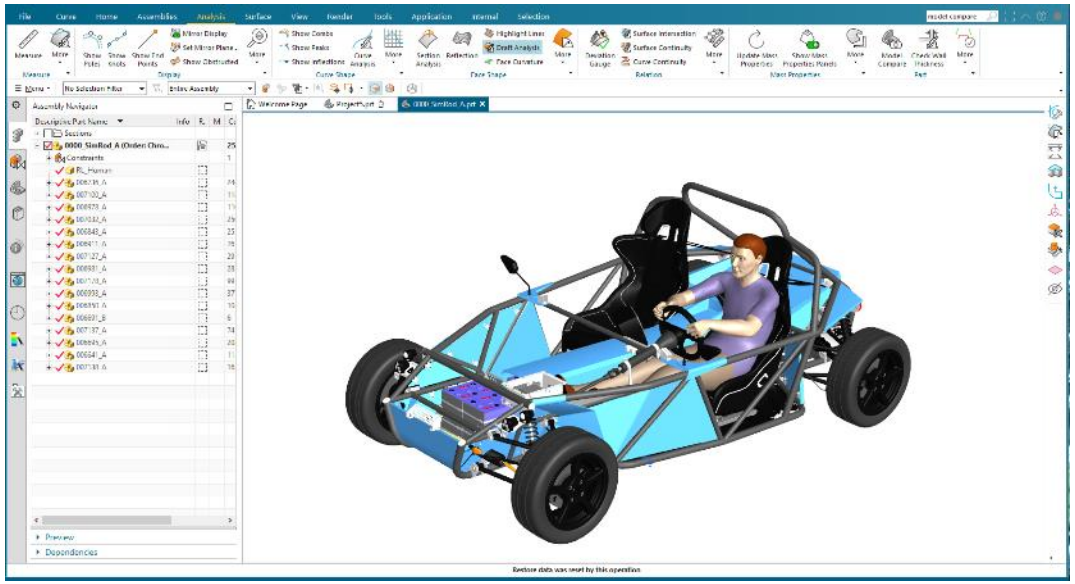

Unrestricted © Siemens AG 2020

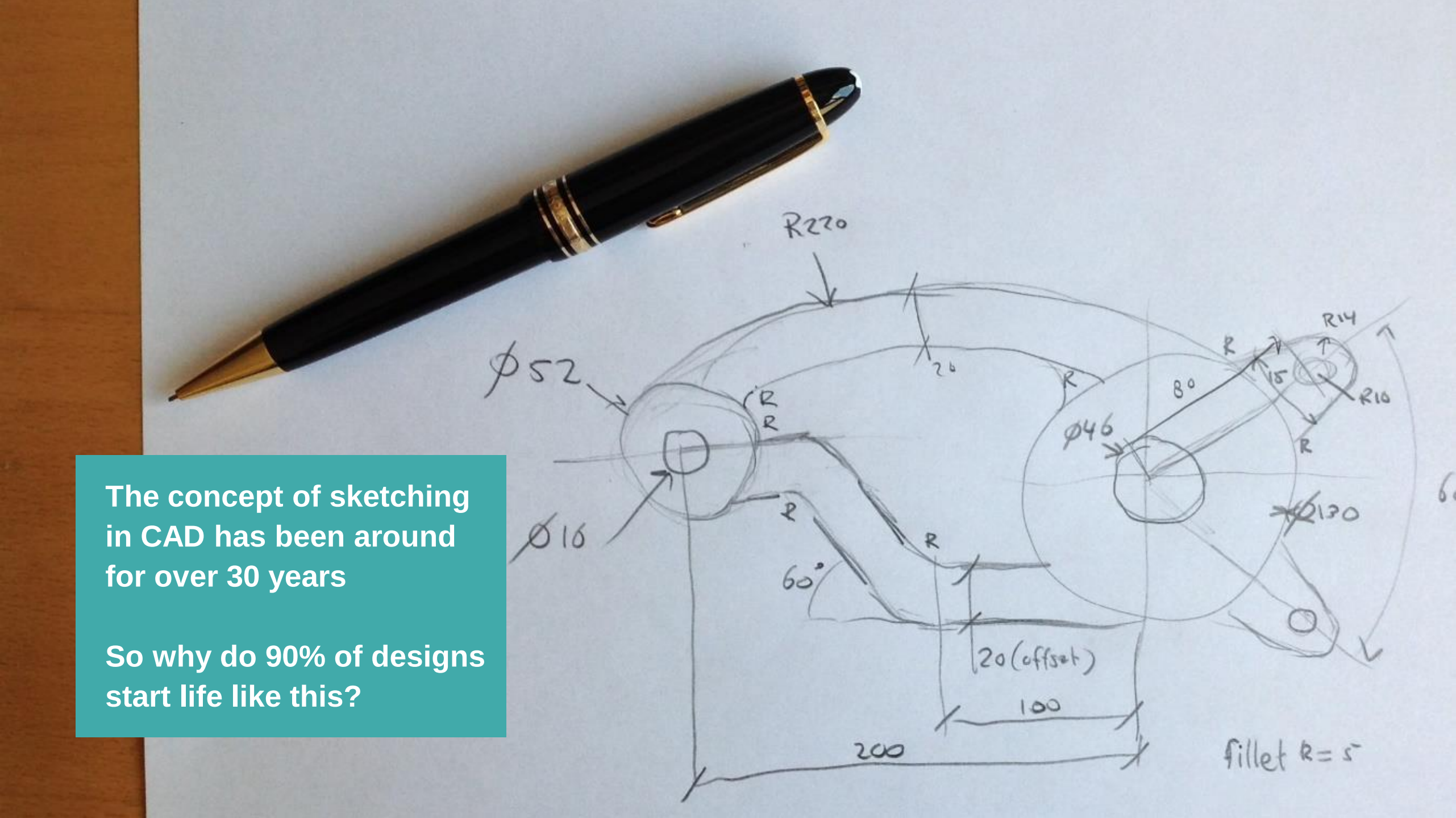

The concept of sketching in CAD has been around for over 30 years

So why do 90% of designs start life like this?

SIEMENS
Ingenuity for life

Because...

Current solutions do not allow an iterative design process

They do not allow you to quickly change your design as ideas evolve

SIEMENS
Ingenuity for life

NX delivers the biggest leap forward in CAD sketching since it was first introduced to the market

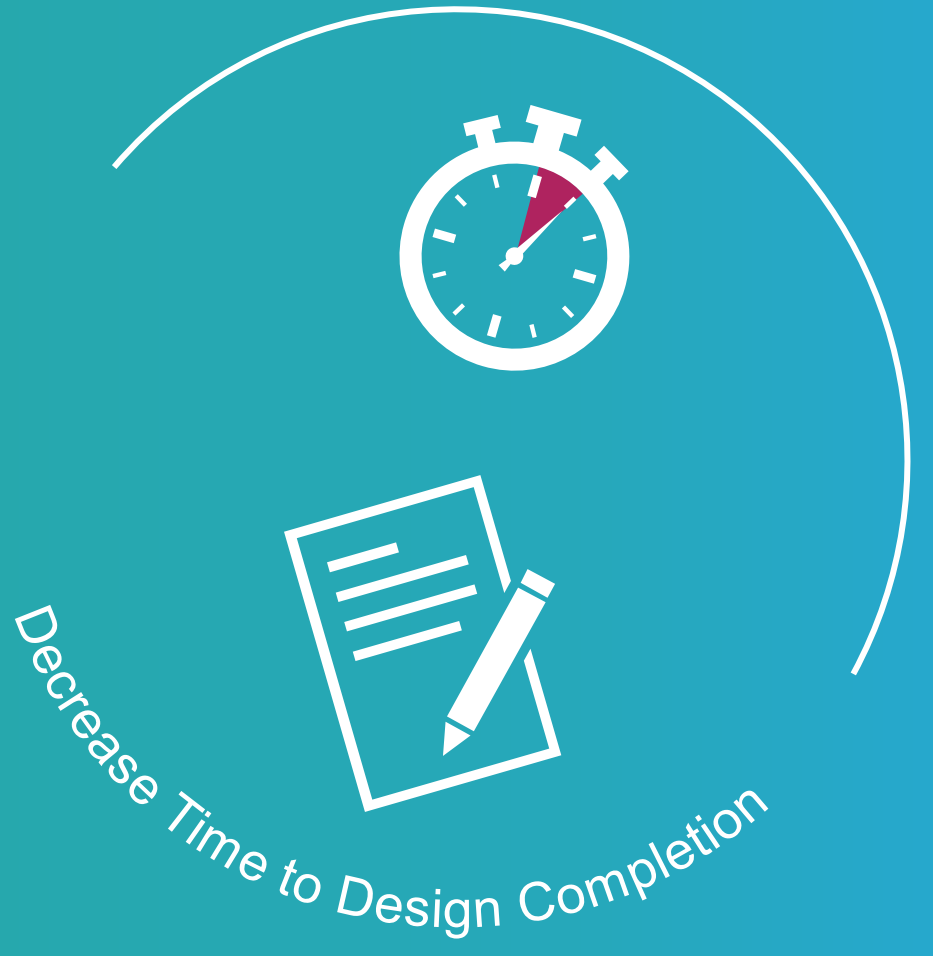

Independent analysis shows 30% reduction in time spent capturing your design ideas

The future of sketching

SIEMENS
Ingenuity for life

- NX sketching anticipates what you are going to drag / modify
- Does the geometric constraining for you as and when you need it
- Applies geometric relationships for you based on surrounding geometry
- Works seamlessly with data regardless of source

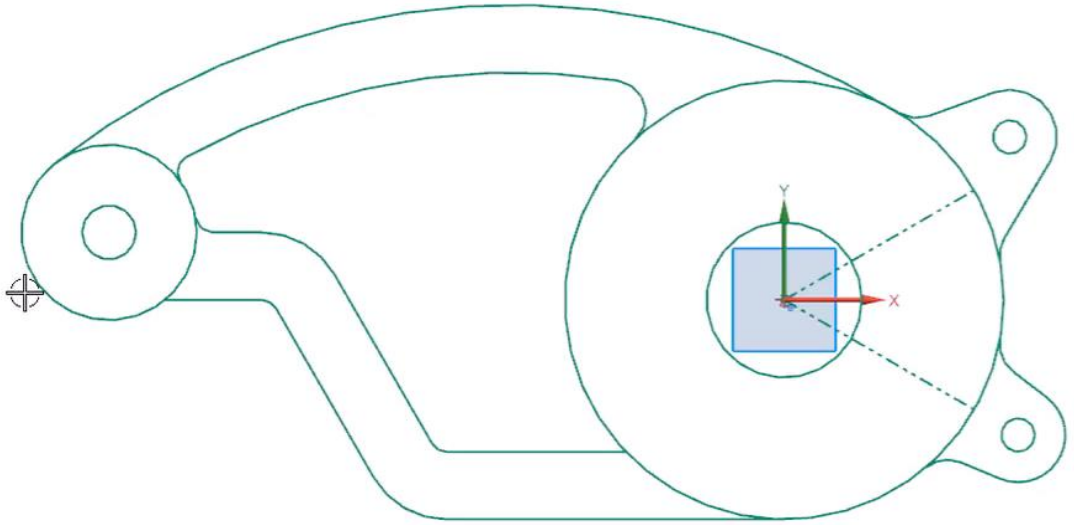

Unrestricted © Siemens AG 2020

New! NX Draw Shape

SIEMENS
Ingenuity for life

New add-on module for freehand drawing of wireframe shapes on bodies

Draw on planar and freeform geometry in either an explicit or associative manner

Shapes created as pen strokes or actual curve geometry

- Analytic shape recognition
- Symmetric drawing

Various ways to modify curves including converting pen strokes into reusable curves

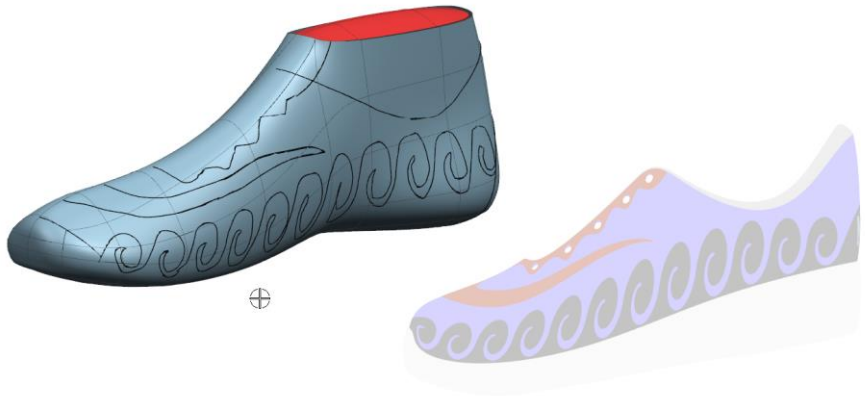

Visually convey and communicate aspects of the design prior to investing in 3D
Enhances NX capabilities to support tasks typically performed in niche software today.

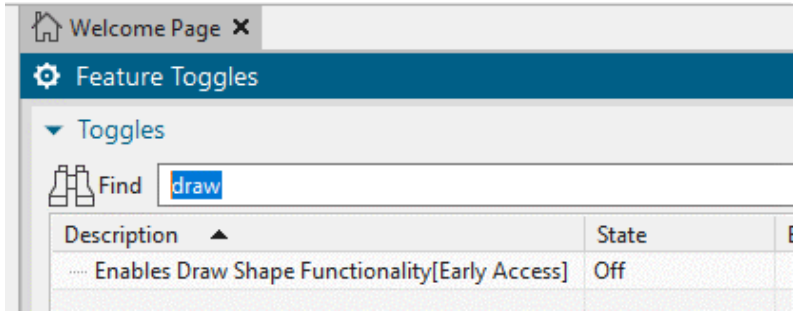

Unrestricted © Siemens AG 2020

Additional Design Enhancements

SIEMENS
Ingenuity for life

Extrude Capabilities

Increased productivity enhancements to one of the most widely used modeling commands.

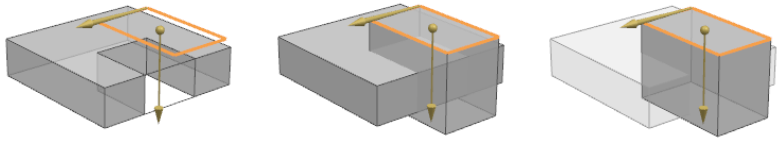

Hole

Specify Hole parameters faster for increased productivity.

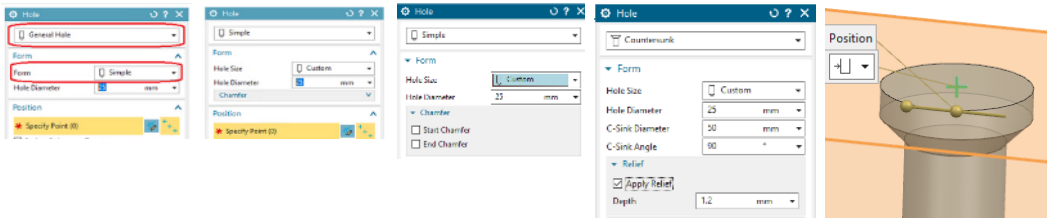

Thread

Enhanced Thread command with many user requested updates for complete workflow support.

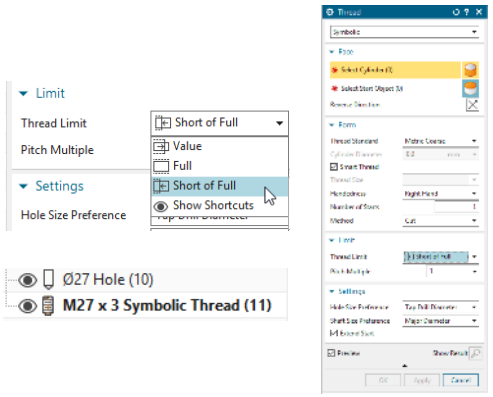

Unrestricted © Siemens AG 2020

Additional Design Enhancements

SIEMENS
Ingenuity for life

Pattern

New Patterning method for increased performance and ease of creation.

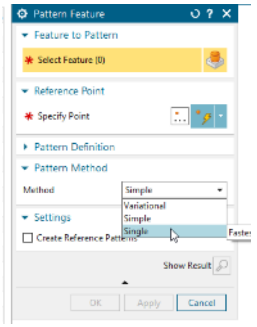

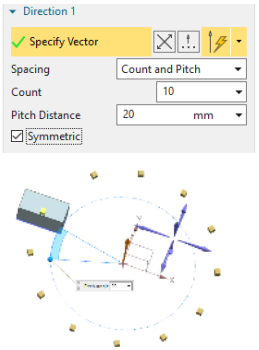

Boolean

Increased productivity by removing the need to perform multiple Boolean operations.

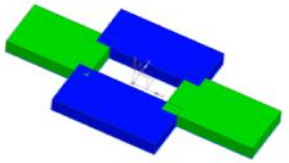

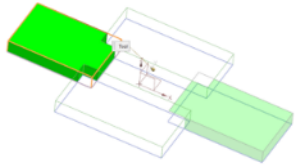

Model Compare

Reduction from hours to minutes or seconds translates directly to improved user productivity.

Unrestricted © Siemens AG 2020

Benefits of Design Enhancements

SIEMENS
Ingenuity for life

Design investments improve end user daily productivity and workflow efficiency

New approach to Sketch gives designers the power to capture their ideas as they iterate.

Enhancements to Extrude, Hole, Thread, Pattern, Boolean, and Model Compare to increase ease of use and designer control.

These improvements address numerous customer enhancement requests and enhance user productivity.

Unrestricted © Siemens AG 2020

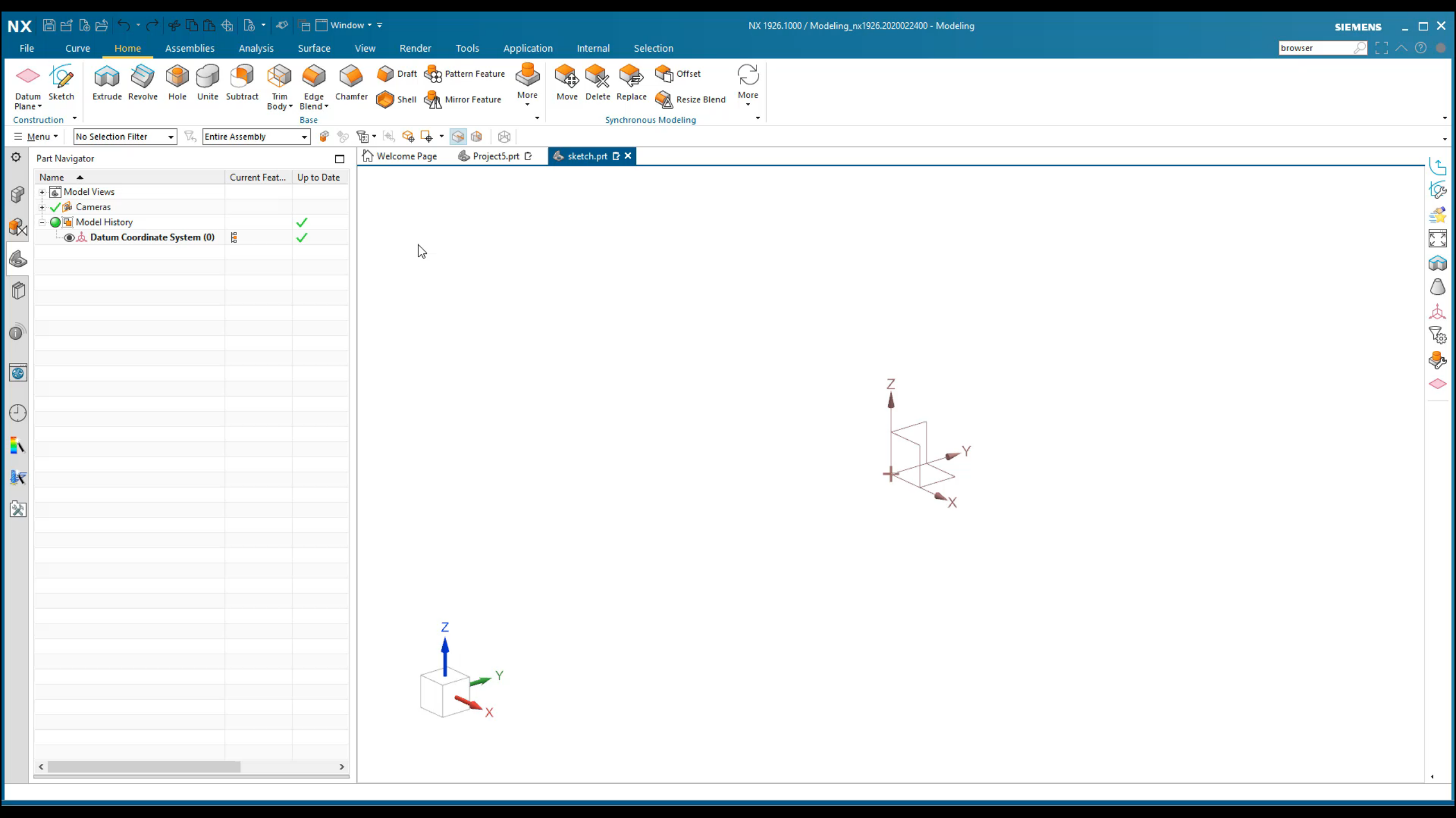
NX
Window
NX 1926.1000 / Modeling_nx1926.2020022400 - Modeling
SIEMENS
File
Curve
Home
Assemblies
Analysis
Surface
View
Render
Tools
Application
Internal
Selection
browser
Datum Plane
Sketch
Extrude
Revolve
Hole
Unite
Subtract
Trim Body
Edge Blend
Chamfer
Draft
Shell
Pattern Feature
Mirror Feature
More
Construction
Base
Move
Delete
Replace
Offset
Resize Blend
More
Synchronous Modeling
Menu
No Selection Filter
Entire Assembly
Part Navigator
Name
Current Feat...
Up to Date
Model Views
Cameras
Model History
Datum Coordinate System (0)
Welcome Page
Project5.prt
sketch.prt
Z
Y
X
Z
Y
X

NX 1926.1000 / Modeling_nx1926.2020022400 - Modeling

SIEMENS

File Curve Home Assemblies Analysis Surface View Render Tools Application Internal Selection

remove param

Datum Plane | Sketch | Extrude | Revolve | Hole | Unite | Subtract | Trim Body | Edge Blend | Chamfer | Draft | Shell | Pattern Feature | Mirror Feature | More | Move | Delete | Replace | Offset | Resize Blend | More

Construction | Base | Synchronous Modeling

Menu | No Selection Filter | Entire Assembly

Part Navigator

Name	Current Feat...	Up to Date
Model Views		
Cameras		
Non-timestamp Geometry		
Model History		✓
Datum Coordinate System (0)		✓
Body (1)		✓
Datum Plane (2)		✓

Welcome Page | Disc_Brake - Copy_igs-copy.prt

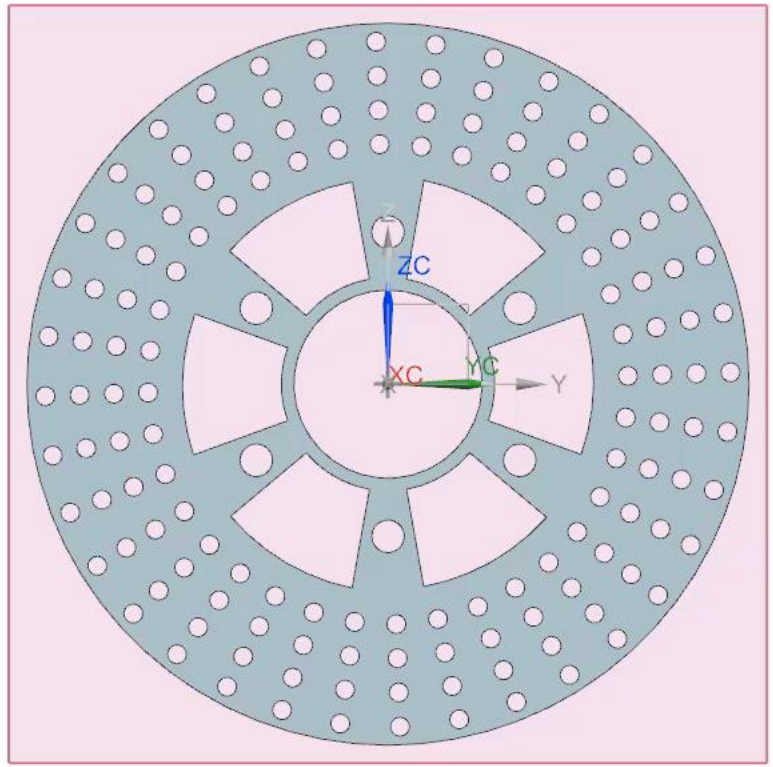

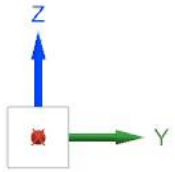

Select objects and use MB3, or double-click an object

NX 1926.1000 / Modeling_nx1926.2020022400 - Modeling

SIEMENS

File | Curve | Home | Assemblies | Analysis | Surface | View | Render | Tools | Application | Internal | Selection

remove param

Datum Plane | Sketch | Point | Line | Arc/Circle | Studio Spline | Text | Curve on Surface | Draw Shape | Helix | More | Project Curve | Intersection Curve | Shadow Curve | Offset Curve | Offset in Face | Bridge | Composite | More | Trim Curve | Curve Length | X-Form | More

Construction | Base | Advanced | Derived | Edit

Menu | No Selection Filter | Entire Assembly

Part Navigator

Name	Current Feat...	Up to Date
Model Views		
Cameras		
Non-timestamp Geometry		
Model History		✓
Datum Coordinate System (0)		✓

Welcome Page | Disc_Brake - Copy_igs.prt

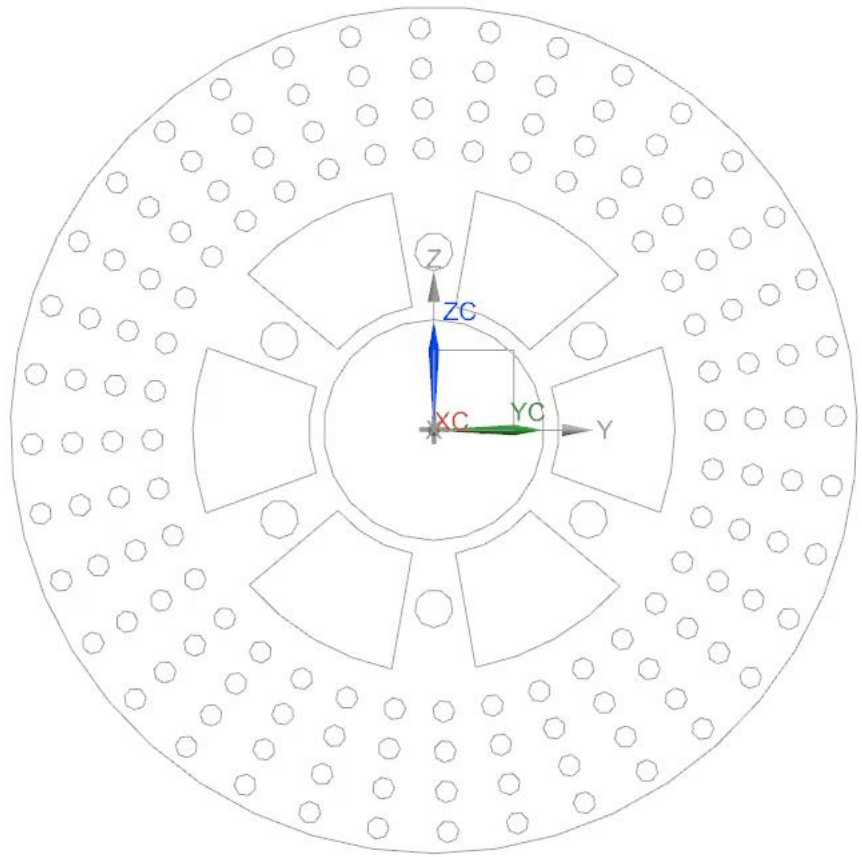

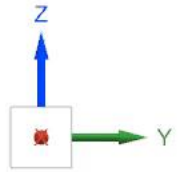

NX 1926.900 / Modeling_nx1926.2020021000 - Layout

SIEMENS

File | Home | Analysis | View | Selection | Tools | Application | Internal

color

New | Profile | Rectangle | Circle | Derived Lines | Offset | Pattern | Mirror — Sketch

New | Define | Smash | Replace | Make Unique — 2D Component

Note — Annotation

Drawing View — View

Associative Assembly | Create from 3D | Copy to 3D — Assistants

Monochrome Display | Display Geometry Color | Edit Settings — Appearance

Part Navigator

Name

- Drawing
- Conceptual Design
  - Layout "Layout 1" (Work-Active)

Dependencies

Details

Preview

Welcome Page | Ktw-machine NX8.prt

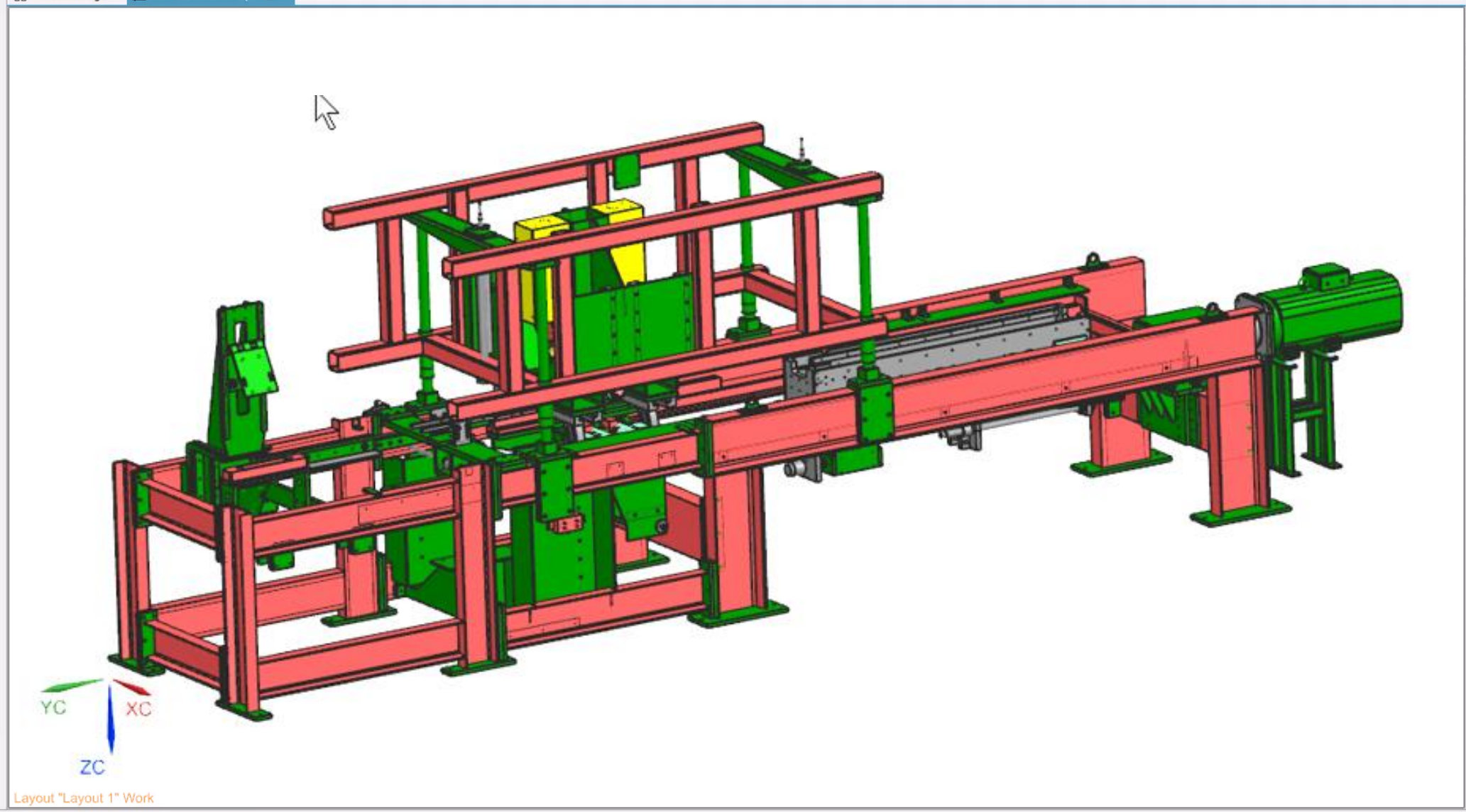

Select objects and use MB3, or double-click, or press-drag to move 2D component, curve, view, dimension or note

Most Productive Modeling Environment

SIEMENS
Ingenuity for life

Capture ideas like never before with new design approach

Simplified workflows and assembly creation

Create designs faster with Structure Designer

Intuitive NX Join classification

- Simplified assembly creation process by supporting drag & drop and selection from multiple graphics windows
- 20% reduction in typical exploded view workflows with consolidated dialog and new capabilities supported
- New DMU & Markup capabilities
- Assembly load performance improvement

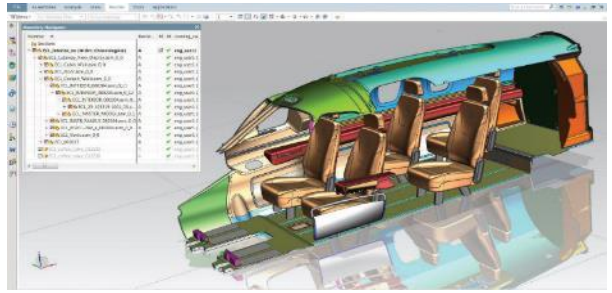

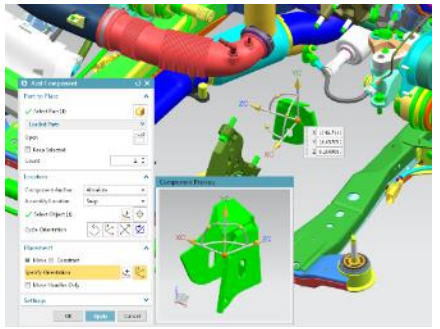

Unrestricted © Siemens AG 2020

Assembly Usability

SIEMENS
Ingenuity for life

Usability enhancements to common assembly operations.

The implementation of new selection and gesture capabilities improve frequently performed assembly workflows.

- Assembly Preference dialog updated to the new format
- Add Component selection and drag-drop component support multiple graphics windows
- New “Find Closest” orientation option for Touch Align constraint

Improved user efficiency by simplifying assembly creation.

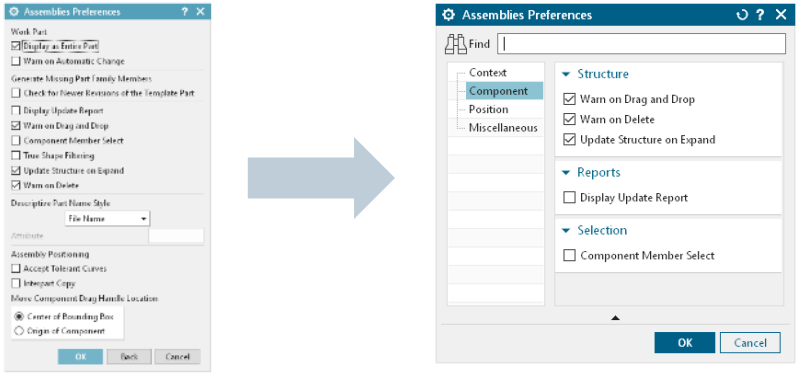

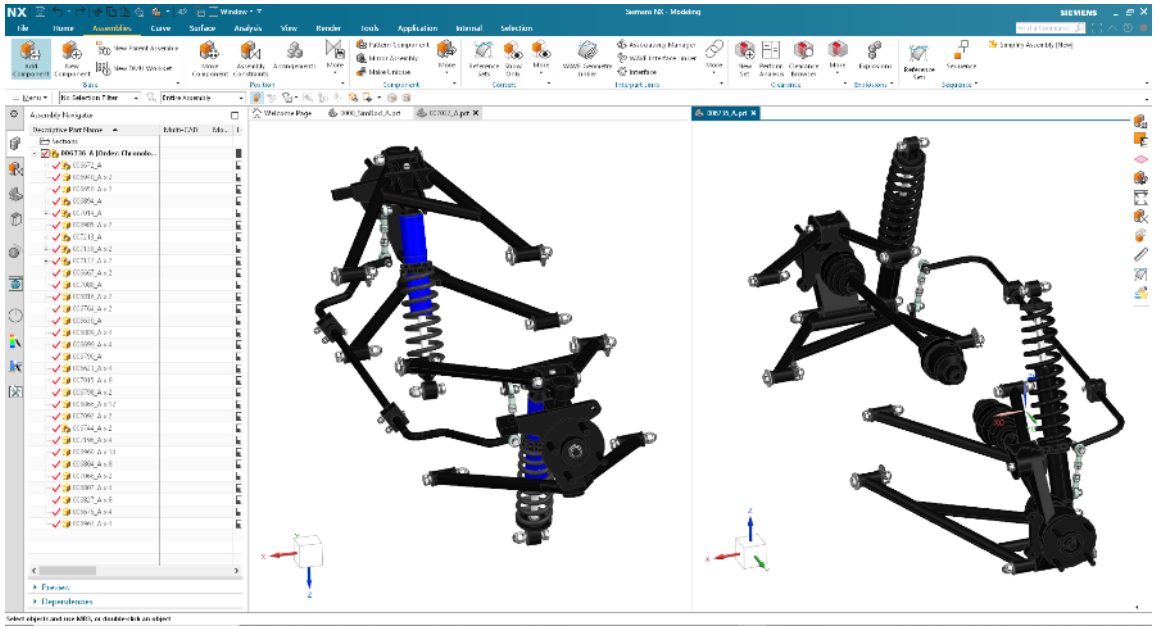

Unrestricted © Siemens AG 2020

DMU Application

SIEMENS
Ingenuity for life

Several new capabilities added to the DMU application

An efficient design process must support what-if studies and provide a method for documenting various design states. The DMU application makes this possible.

- Dedicated DMU Preferences and Customer Defaults
- New Measure and Section snapshot properties
- NX Viewer supports DMU & Markup capabilities

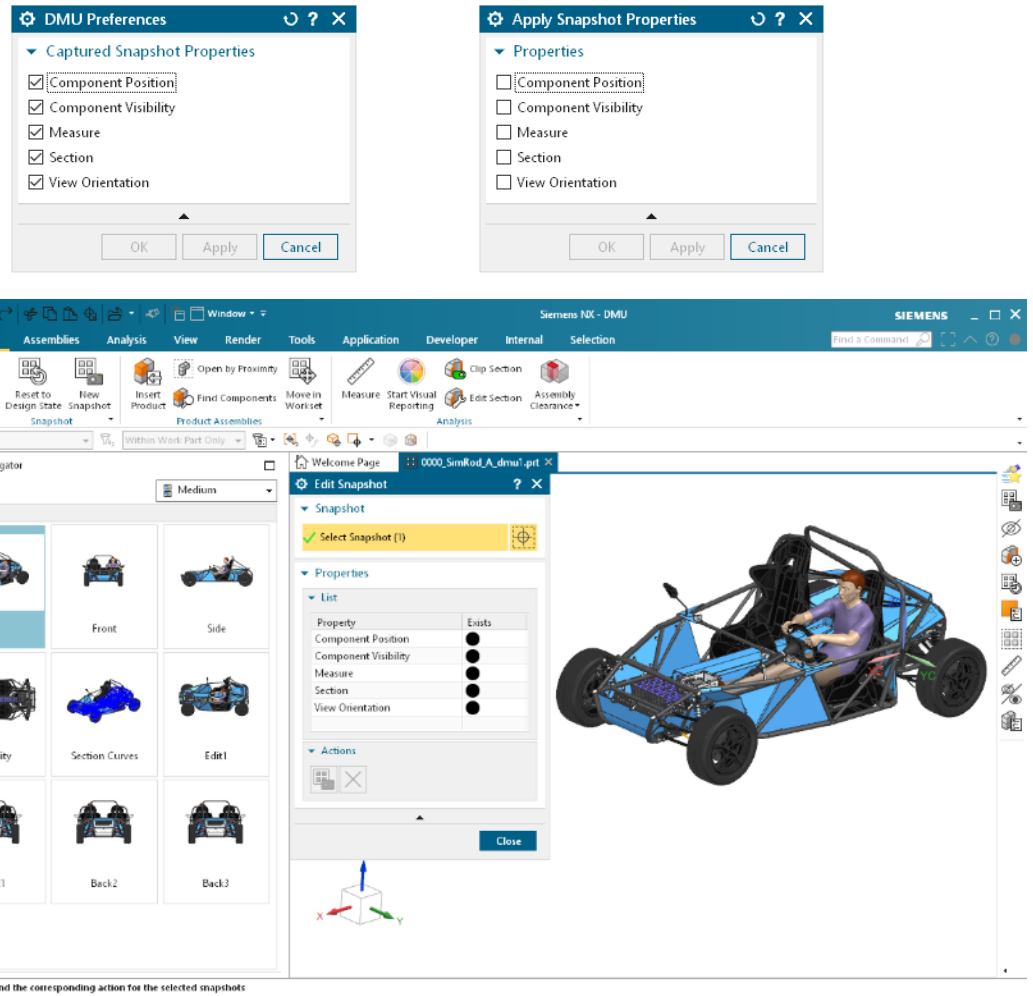

New DMU capabilities greatly expands the DMU workflows supported by NX.

Unrestricted © Siemens AG 2020

Benefits of Assemblies updates

SIEMENS
Ingenuity for life

- Simplified assembly creation process by supporting drag & drop and selection from multiple graphics windows
- 20% reduction in typical exploded view workflows with consolidated dialog and new capabilities supported
- New DMU & Markup capabilities deliver the most requested DMU.
- Assembly load performance improvement

Unrestricted © Siemens AG 2020

NX | Window | Siemens NX - Modeling | SIEMENS

File | Home | Assemblies | Curve | Surface | Analysis | View | Render | Tools | Application | Internal | Selection

Find a Command

Datum Plane | Sketch | Construction

Extrude | Revolve | Hole | Unite | Subtract | Trim Body | Edge Blend | Chamfer | Draft | Shell | Pattern Feature | Mirror Feature | More | Base

Move | Delete | Replace | Offset | Resize Blend | More | Synchronous Modeling

Menu | No Selection Filter | Entire Assembly

Assembly Navigator

Descriptive Part Name

- Sections
- 0000_SimRod_A (Order: Ch...
  - Constraints
  - 006736_A
  - 006978_A
  - 007032_A
  - 007178_A
  - 006850_A
  - 006695_A

Preview

Dependencies

Welcome Page | 0000_SimRod_A.prt

Select objects and use MB3, or double-click an object

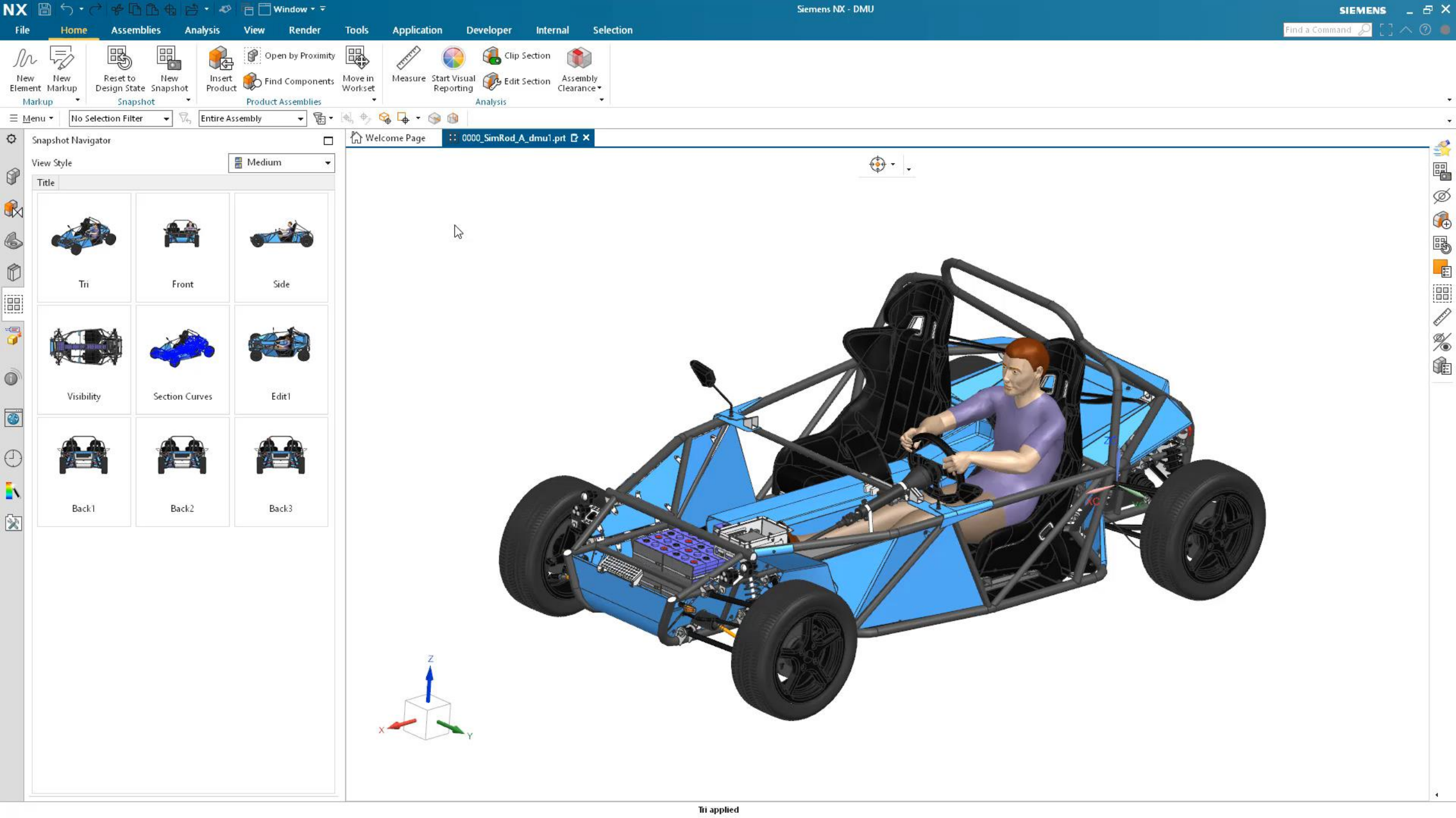
NX
Window
Siemens NX - DMU
SIEMENS
File
Home
Assemblies
Analysis
View
Render
Tools
Application
Developer
Internal
Selection
Find a Command
New Element
New Markup
Markup
Reset to Design State
New Snapshot
Snapshot
Insert Product
Open by Proximity
Find Components
Move in Workset
Product Assemblies
Measure
Start Visual Reporting
Clip Section
Edit Section
Assembly Clearance
Analysis
Menu
No Selection Filter
Entire Assembly
Snapshot Navigator
View Style
Medium
Title
Tri
Front
Side
Visibility
Section Curves
Edit1
Back1
Back2
Back3
Welcome Page
0000_SimRod_A_dmu1.prt
Z
X
Y
Tri applied

Most Productive Modeling Environment

SIEMENS
Ingenuity for life

Capture ideas like never before with new design approach

Simplified workflows and assembly creation

Create designs faster with Structure Designer

Intuitive NX Join classification

- Speed up your design process and reduce time to market with enhancements around structural frames, rich industry standards library, and reusable frames.
- Better integration with downstream applications

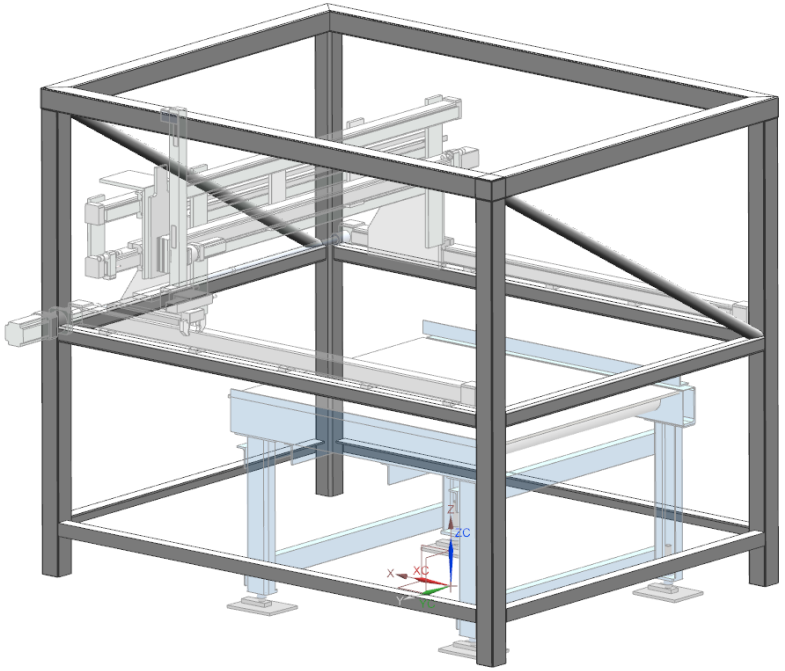

Unrestricted © Siemens AG 2020

Industry challenges

SIEMENS
Ingenuity for life

Lack of automated tasks require manual intervention

Delivered libraries tend to be “demonstration” content and require time in setting up and testing

Created structures tend to be owned by a parent assembly and limit reuse

Design, analysis, manufacturing tend to come from different vendors and lack of integration rework

Pressure	Response
Project schedules for engineering products are shortening	60%
Cost of raw goods is increasing (e.g. steel, aluminum, etc.)	33%
Development budgets for product engineering are shrinking	32%
Decreasing target product price-points driving down product cost targets	28%
Market or customer requirements demand increasingly “smarter” products	22%

Source: AberdeenGroup “Enabling Customer Responsiveness within the Modern Engineering Organization” November 2008

Unrestricted © Siemens AG 2020

Design structural frames more efficiently

SIEMENS
Ingenuity for life

Structure Designer is
- Design tool for creating structural frames
- Fast rules-based authoring
- Rich shape library
- Support for structure reuse
- Drawing cut lists

Structure Design is for
- Mechanical designers or engineers
- Welded structures
- Structures that are based on standard stock

Structure Designer is more advanced by
- Rich library based on industry standards
- Rules driven member placement
- Automatic corner creation

Structure Designer will help you
- Reduces design time for faster time to market
- fosters reuse for supporting modular design
- more complete command set for more accurate and realistic structure designs

Unrestricted © Siemens AG 2020

Structural frames in minutes

SIEMENS
Ingenuity for life

- Easy to use structural frame modeling capability
- Rapid frame drawing assistant that creates 2D skeletons with minimal clicks
- 3D members placement are automatically oriented based on user defined rules
- Corner treatments are rules-driven and automatically added
- Create accurate designs with specialty features such as structural corner stiffeners, end caps, and mounting feet

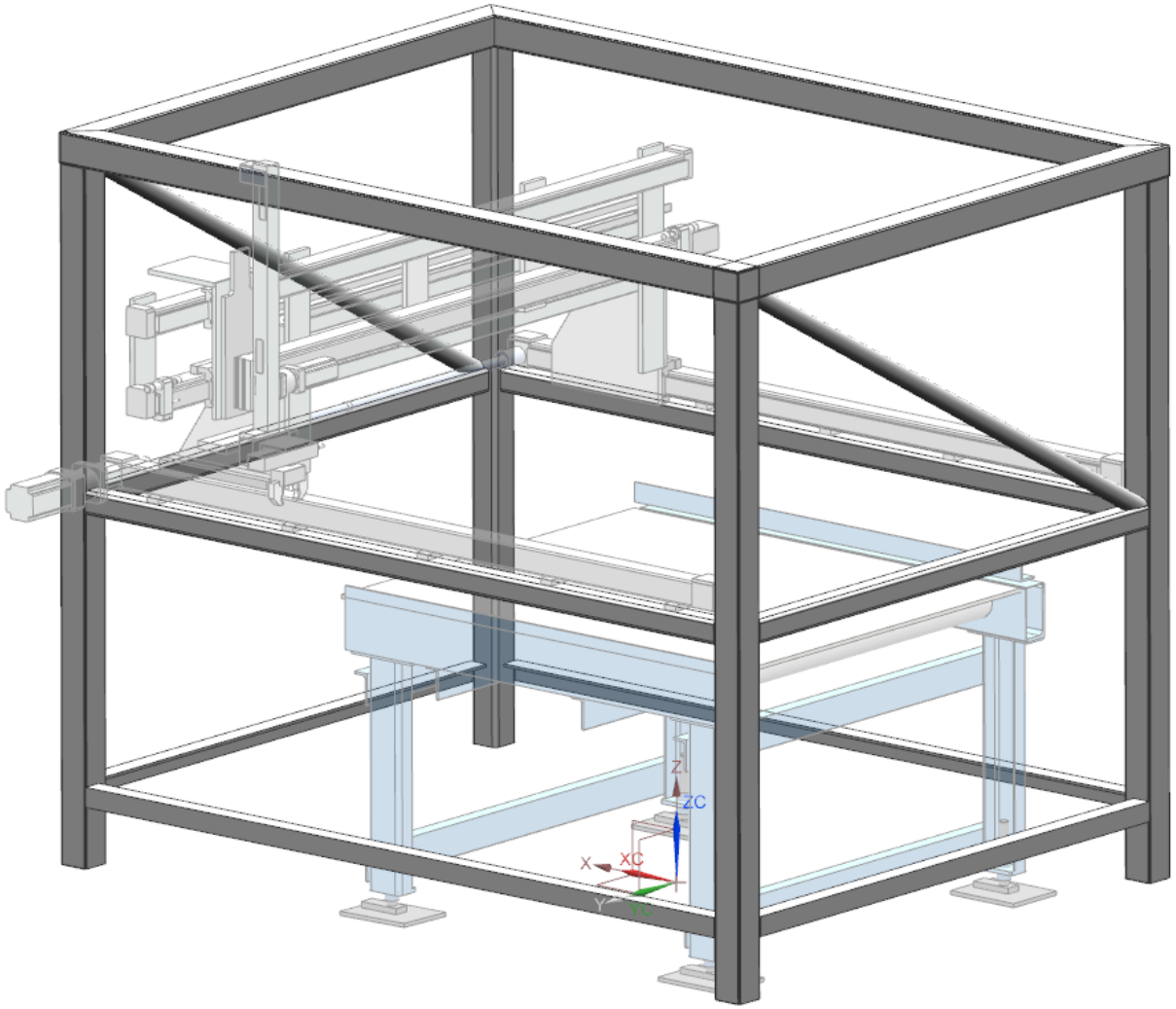

Faster design for faster time to market.

Unrestricted © Siemens AG 2020

Benefits of Structure Designer Enhancements

SIEMENS
Ingenuity for life

Save up to 60% on structure design costs

- Structural frames in minutes that reduces design time for faster time to market
- Rich industry standards library that ensures accurate and realistic structure designs
- Reusable frames that are ideal for modular designs that results in more time for making quality-driven design iterations

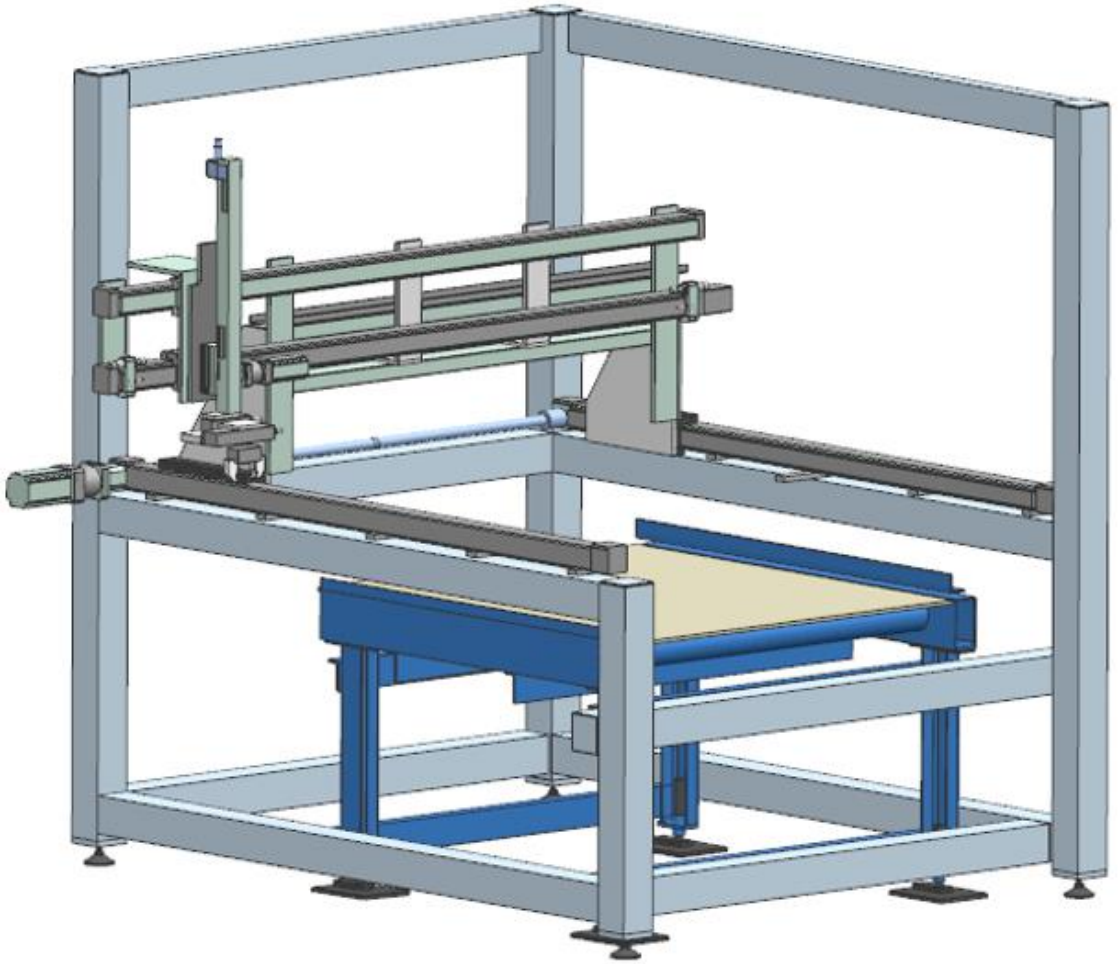

Unrestricted © Siemens AG 2020

Add Component | New Component | New Parent Assembly | New DMU Workset — Base
Move Component | Assembly Constraints | Arrangements | More — Position
Pattern Component | Mirror Assembly | Make Unique | More — Component
Reference Sets | Show Only | More — Context
WAVE Geometry Linker | Associativity Manager | WAVE Interface Linker | Interface | More — Interpart Links
New Set | Perform Analysis | Clearance Browser | More — Clearance
Explosions — Explosions
Sequence — Sequence

Menu | No Selection Filter | Entire Assembly

Assembly Navigator

Descriptive Part Name

- Sections
- _1926_Machine (Order: Chronological)
  - Y-Achsen_DGPL-40-GK-FDG.1.1_id170_x_t
  - X-Achsen_DGE-40-ZR-KF1_id399_x_t
  - Umgebung.stp_id658_x_t
  - Z-Achse_DGEA-18_id918_x_t
  - Table
  - 00191256.1_id921_x_t
  - StructureD2_00

Preview
Dependencies

Welcome Page | _1926_Machine.prt

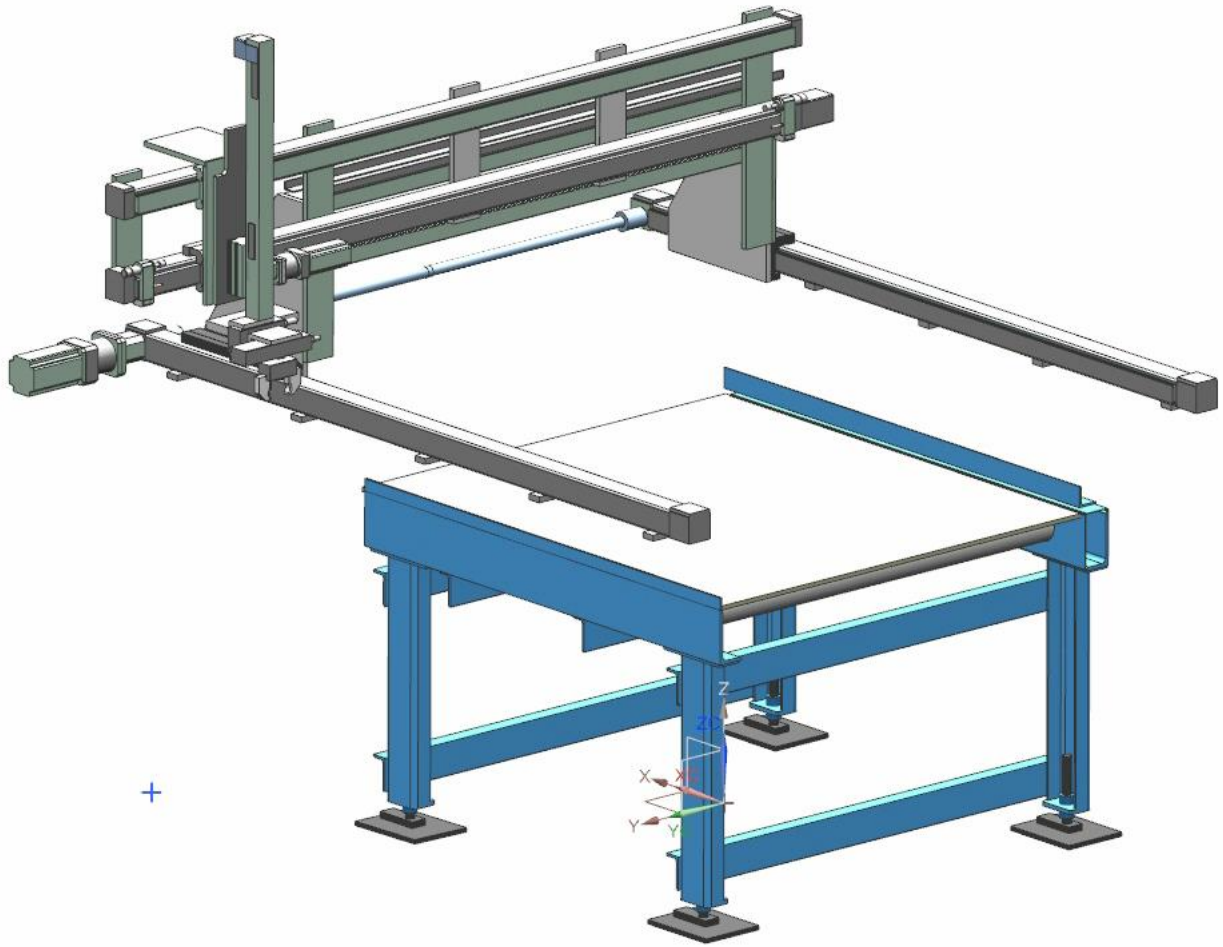

NX Join

SIEMENS
Ingenuity for life

Capture ideas like never before with new design approach

Simplified workflows and assembly creation

Create designs faster with Structure Designer

Intuitive NX Join classification

Initial release of NX Join targets users of fasteners in the CAD model

- Enables placement of fastener locations and establishes join features in the model
- Provides easy access to database of fasteners via NX dialog
- Add fastener component(s) to the assembly and bill of materials if desired
- Expose the stack up calculation information
- Multi-edit large groups of data at once
- Supports join feature publishing into Teamcenter to enable management and exposure of joins to other applications.

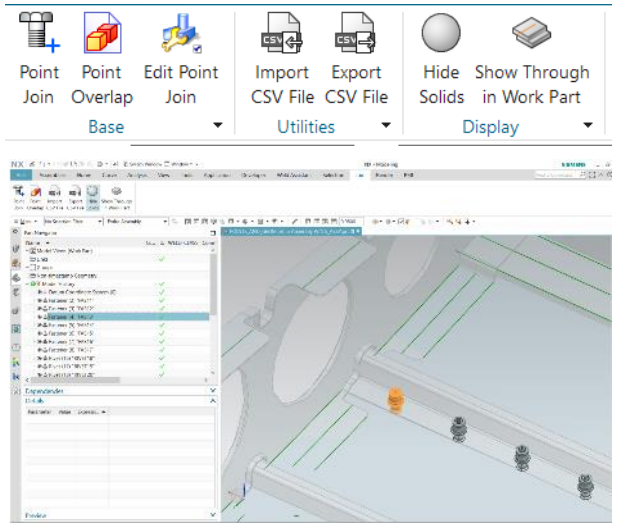

Unrestricted © Siemens AG 2020

Join

SIEMENS
Ingenuity for life

Features

Each join feature is a sub class of three primary classes of joins: point, line or face. In this release the sub-classes are all of type point and include:

- Rivet
- Fastener
- Spot weld

The features appear in the part navigator

Info and property information is available from the RMB

Custom attributes can be configured in

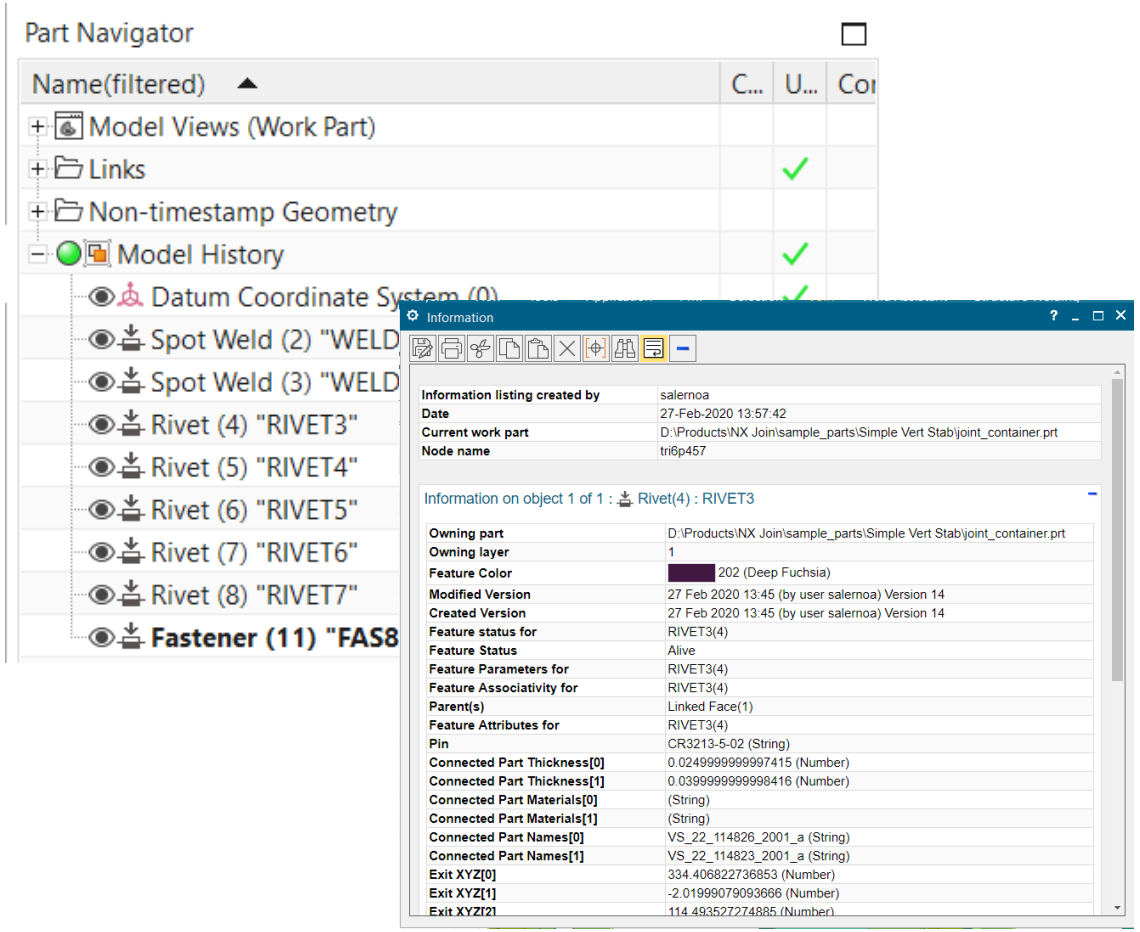

Defining join features in the NX model captures fastener information in a form that can used throughout the entire product lifecycle.

Unrestricted © Siemens AG 2020

Benefits of NX Join enhancements

SIEMENS
Ingenuity for life

Reduces the time necessary to place and define fasteners and hardware.

- Simplified visualization reduces load and visual manipulation time
- Multi-edit capability reduces time to react to change

Improves quality of the fastener assembly design

- Real time stack up evaluation identifies proper fastener lengths
- Hardware libraries ensure selection of standard parts

Integration with other applications ensure a complete lifecycle solution

Unrestricted © Siemens AG 2020

NX Join overview

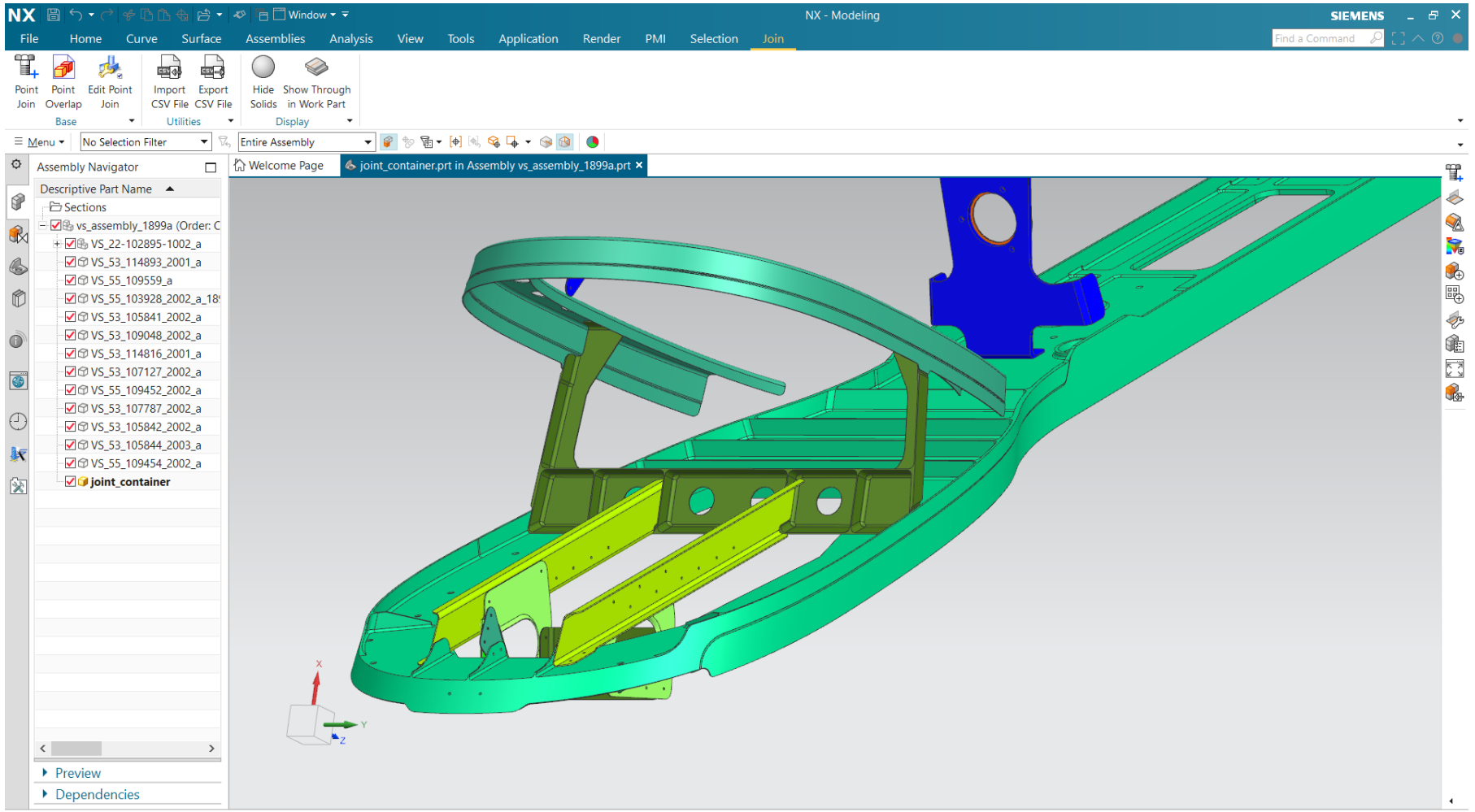

Unrestricted © Siemens AG 2020

Software Details

SIEMENS
Ingenuity for life

NX Structure Designer
- An add-on module, see NX30191
- $6,996 – 23 tokens
- Requires NX Mach Designer – or higher
- Works in native or managed mode

Packaging for NX Draw Shape
- [NX3017x] NX Draw Shape – Product Number to be finalized prior to NX 1926 release
- Prerequisite: NX Mach Bundle or equivalent

NX Join
- NX30192
- $10,000 – 32 tokens
- Must have Gateway and Assemblies

NX DMU and Markup
- NX30125
- $1700 – 6 tokens.
- Must have Gateway and Assemblies

Unrestricted © Siemens AG 2020

NX: Breaking down the barriers to innovation

SIEMENS
Ingenuity for life

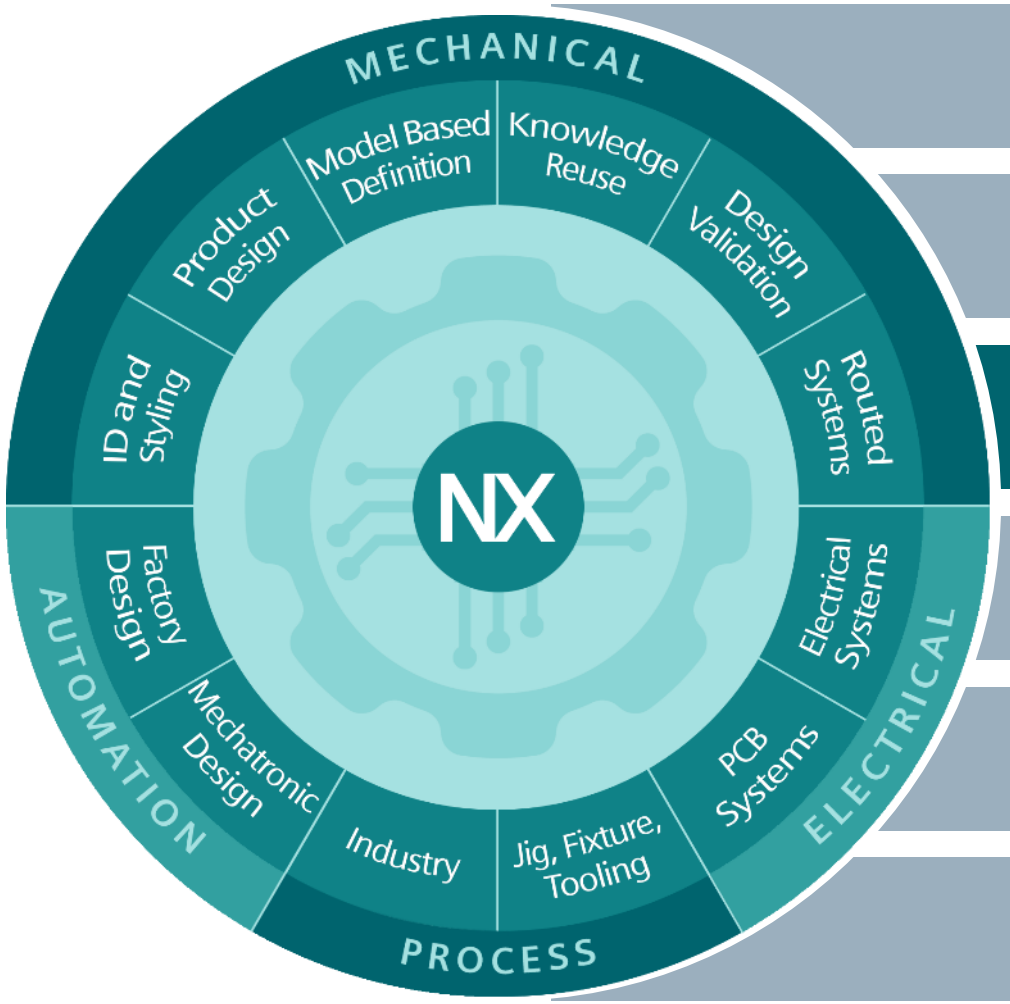

Most Productive Modeling Environment

Generative Engineering

Industrialized Additive Manufacturing

Electromechanical Design

Collaborative Design and Management

Integrated Simulation and Manufacturing

Unrestricted © Siemens AG 2020

SIEMENS
Ingenuity for life

More control for creating the designs of tomorrow.

Unrestricted © Siemens AG 2020

Design for Additive Manufacturing

SIEMENS
Ingenuity for life

This release extends NX ability to engineer lattice structures to suite a broader set of functional requirements and improves Design – Additive Manufacturing collaboration

- Numerous new and improved lattice structure design workflow capabilities
- Design for Additive Manufacturing collaboration improvements via 3MF

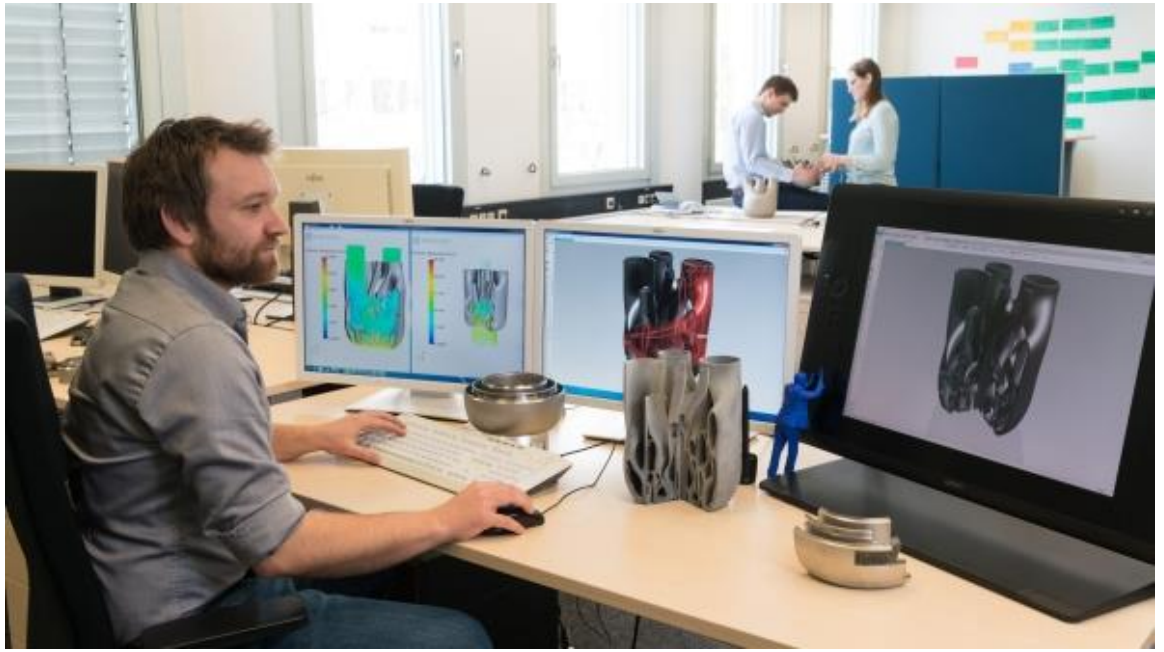

Industrialized use of Lattice Structures in Additive Manufacturing workflows and improved collaboration both internally and with suppliers.

Unrestricted © Siemens AG 2020

New! Body Lattice

SIEMENS
Ingenuity for life

New command that allows for the use of any CAD body as a unit cell

Unit cell can be parametrically defined or based on an imported body

Unit cell body can be a solid or sheet

Resulting lattice structure is associative to the unit cell definition

Any analytic or freeform shape is now possible, expanding the engineering possibilities of lattices. 2.5 D lattices are now possible supporting various in-fill requirements.

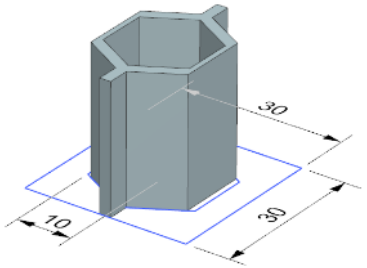

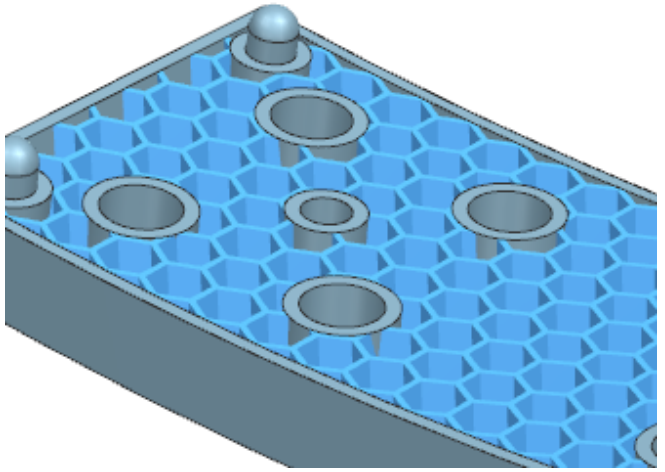

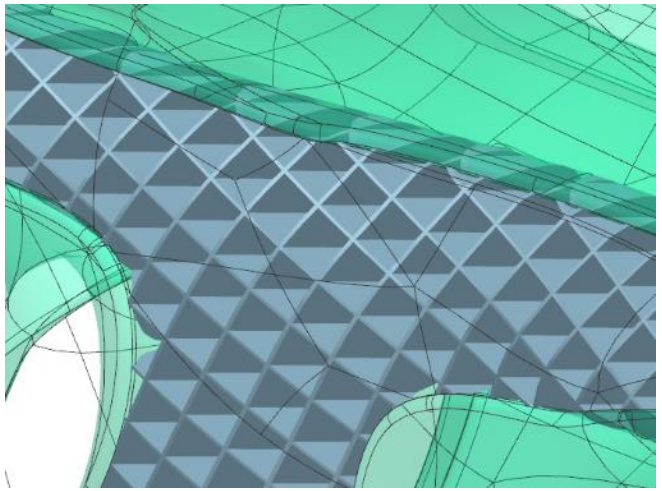

Unrestricted © Siemens AG 2020

Lattice

SIEMENS
Ingenuity for life

Numerous improvements to graph based lattice modeling commands and workflows

Lattice command (Graph based, Rods & Cones) now supports specifying a ball diameter at the nodes

Rod Thickness command also supports ball diameters at the nodes

- Modify Rods, Balls, or Both

Connect lattice command has added control for the tessellation of the resulting body

New! Clip Lattice command allows for clipping any selected lattice to any boundary body

A more compact graph representation is now used for greater efficiency and improved performance

Lattice tessellation has been enhanced for improved geometric quality

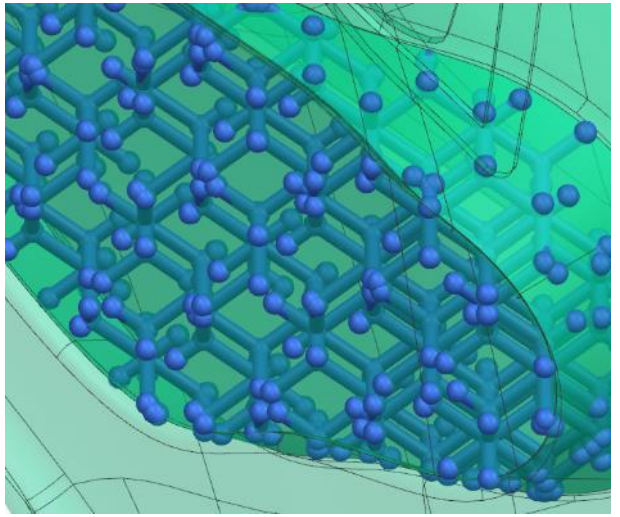

Balls at the lattice nodes and boundary improve lattice durability. Tessellation factor is maintained between editing operations for improved lattice quality.

Unrestricted © Siemens AG 2020

3MF Export

SIEMENS
Ingenuity for life

Export body & face colors, visualization material textures, and decals

- Texture based visualization materials
- Multiple decals applied on the same face
- Various mapping types

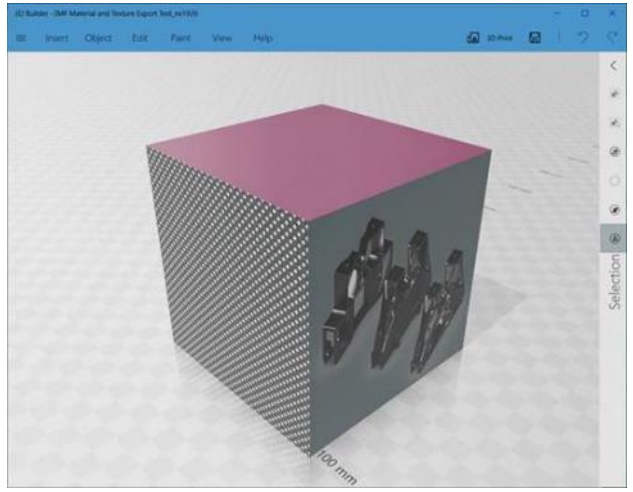

Export and Import lattice graph definition

Improve collaboration among the community of Additive Manufacturing OEMs, suppliers and services bureaus. Manufacturing slicing performance is significantly improved using the lattice graph directly from 3MF.

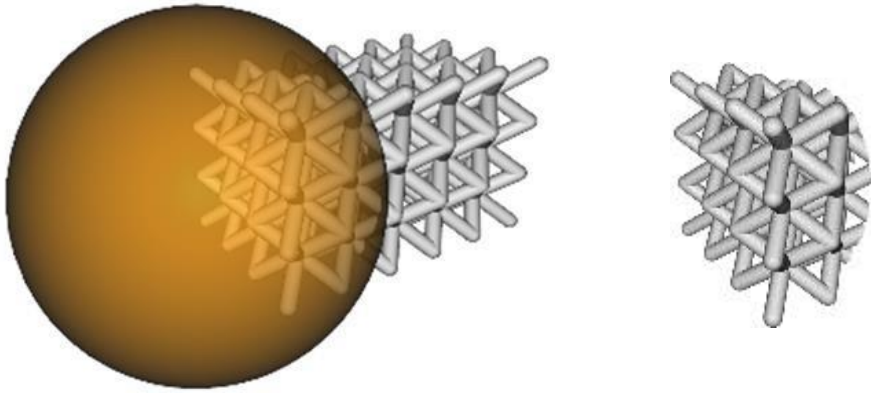

Unrestricted © Siemens AG 2020

Benefits of DfAM Enhancements

SIEMENS
Ingenuity for life

NX Design for Additive Manufacturing improvements support the Industrialization of these processes

NX Lattice Structures Design improvements means structures can be engineered for durability and functional performance.

Extended 3MF support improves collaboration and speeds Design – Additive Manufacturing cycles both internally and with suppliers.

Unrestricted © Siemens AG 2020

Software Details

SIEMENS
Ingenuity for life

Packaging for NX Lattice Structures Design

- [NX30220] NX Lattice Structures Design Add-on
- Prerequisite: NX Mach Bundle or equivalent

Packaging for 3MF Import / Export

- [NX13110] Mach 3 Additive Design with Convergent Bundle
- Prerequisite: None
- [NXS30110] Additive Design with Convergent Sticky Add-on
- Prerequisite: NX Mach Bundle or equivalent

Unrestricted © Siemens AG 2020

NX: Breaking down the barriers to innovation

SIEMENS
Ingenuity for life

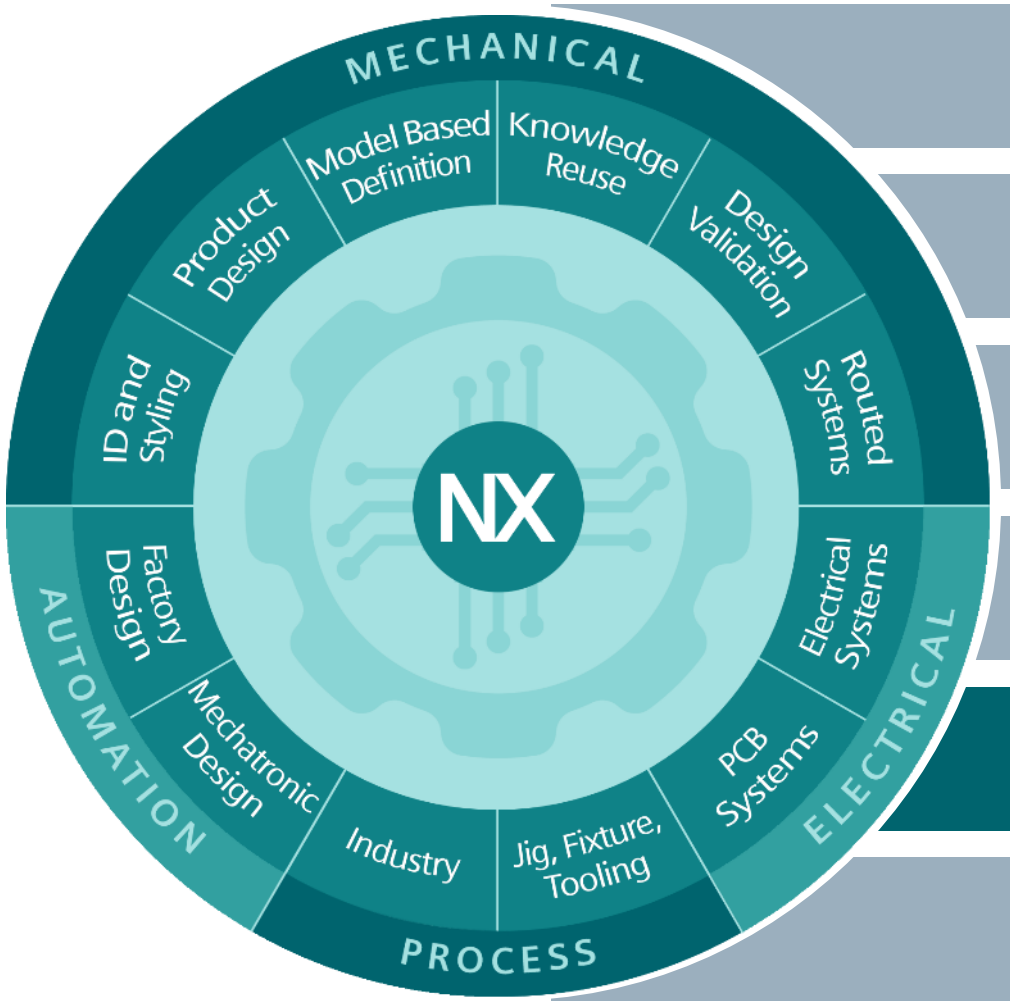

Most Productive Modeling Environment

Generative Engineering

Industrialized Additive Manufacturing

Electromechanical Design

Collaborative Design and Management

Integrated Simulation and Manufacturing

Unrestricted © Siemens AG 2020

Model Based Definition

SIEMENS
Ingenuity for life

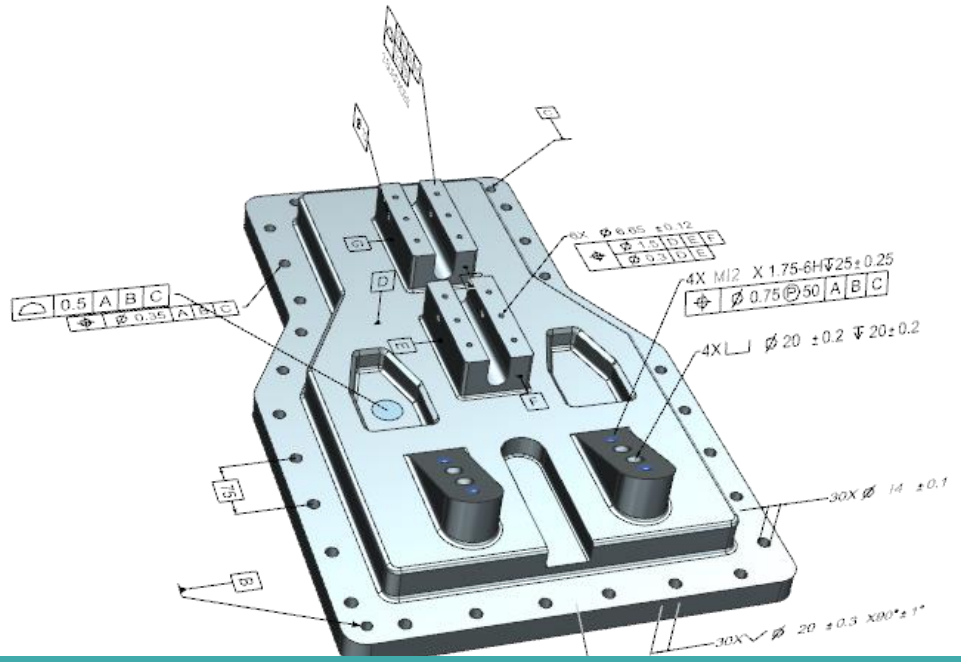

84% of products from best-in-class manufacturers achieve revenue, cost, launch and quality targets using model based definition

-Aberdeen Group

Unrestricted © Siemens AG 2020

Confidence in Collaboration

SIEMENS
Ingenuity for life

Effortlessly publish detailed technical data packages

- Greater control of published Technical Data Package content from NX along with support for additional viewing workflows.

Full Support of Teamcenter X

- New cloud PLM product with expertise bundled into SaaS offerings to bring customers immediate value and scale with their needs.

Unrestricted © Siemens AG 2020

Model Based Definition

SIEMENS
Ingenuity for life

Several workflow and functional improvements focused on improving design and collaboration efficiency

- Greater support and automation for publishing Technical Data Packages from NX
- New capabilities for PMI Compare
- Dimension workflow improvements
- Additional standards coverage for creating standards-compliant models

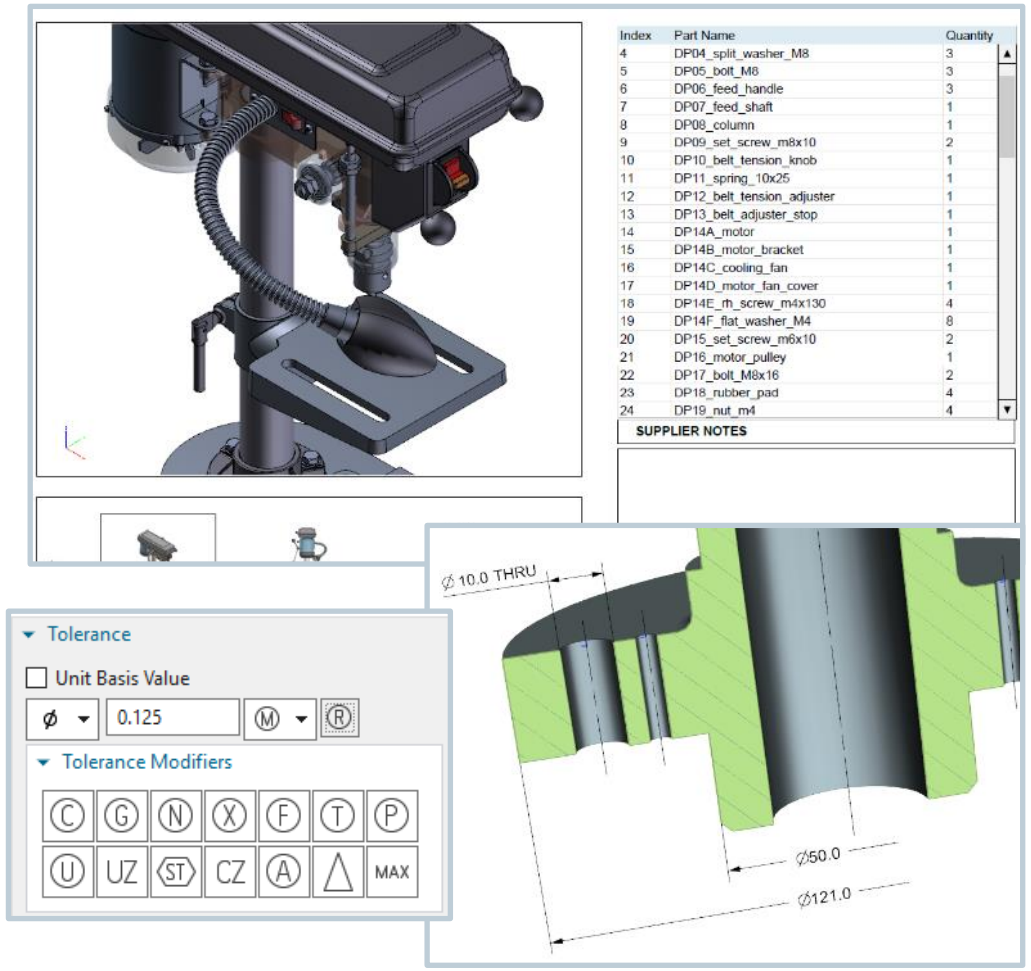

Unrestricted © Siemens AG 2020

Automatic Table improvements

SIEMENS
Ingenuity for life

Multiple workflow and functional improvements for Automatic Tables focused on improving efficiency

- Automatic model view display update for Viewports
- Control over PMI object naming in a PMI Table
- Additional column entries for PMI Tables
- Support or filtering a PMI Table based on specific PMI types
- Configurable column widths
- Support for lock (freeze) table header when scrolling

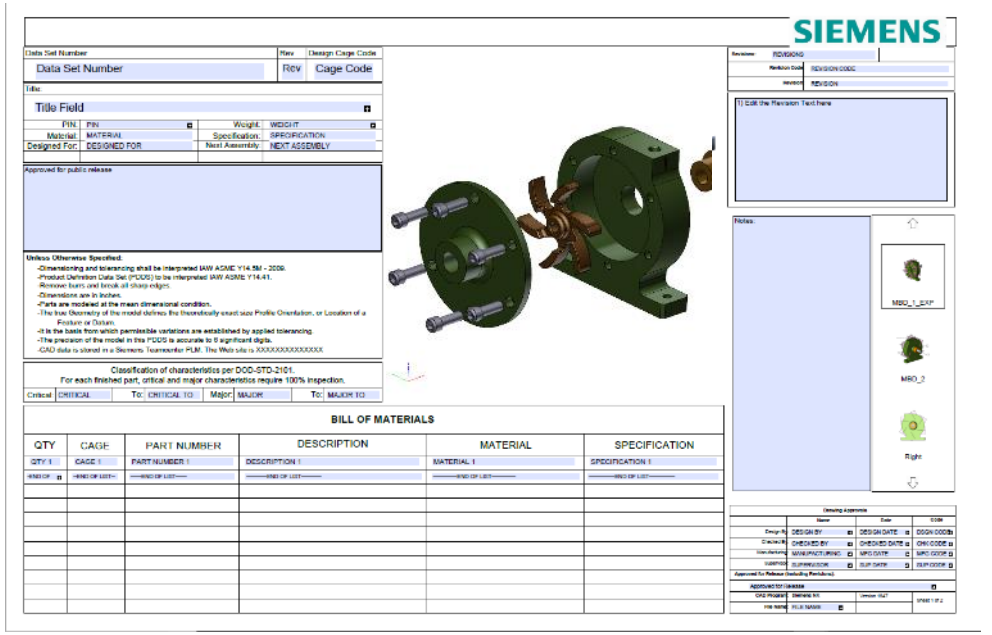

Greater control of published Technical Data Package content from NX along with support for additional viewing workflows.

Unrestricted © Siemens AG 2020

Enhanced publishing

SIEMENS
Ingenuity for life

Greater support and automation for publishing Technical Data Packages

- Multi-select attachments
  - Select multiple attachments in a single operation
- Open on Publish
  - Automatically open Adobe Acrobat Reader to view newly published 3D PDF technical data package

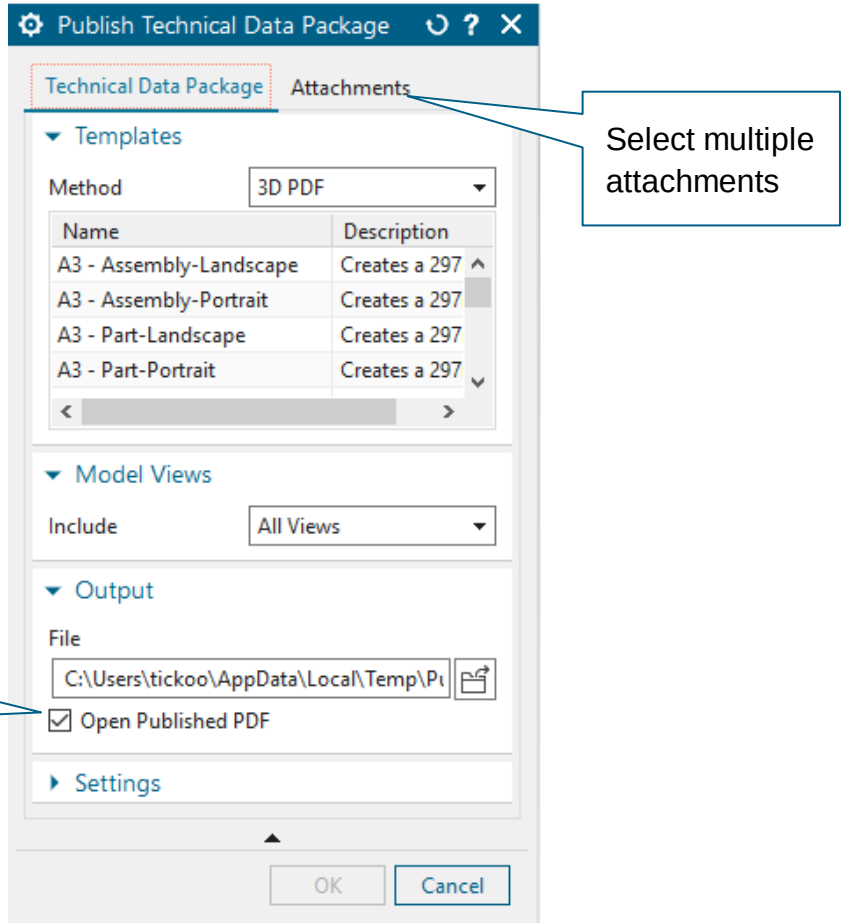

Effortless publishing of Technical Data Packages from NX.

Unrestricted © Siemens AG 2020

PMI Compare enhancements

SIEMENS
Ingenuity for life

Additional PMI object properties for enhanced workflows and improved efficiency

- Feature Control Frame Tolerance modifier comparison and reporting
- Additional detailed comparisons for Hole & Thread Callout properties
- Custom Symbol properties comparison and reporting
  - detects changes in the text, angle, scale, horizontal, and vertical properties

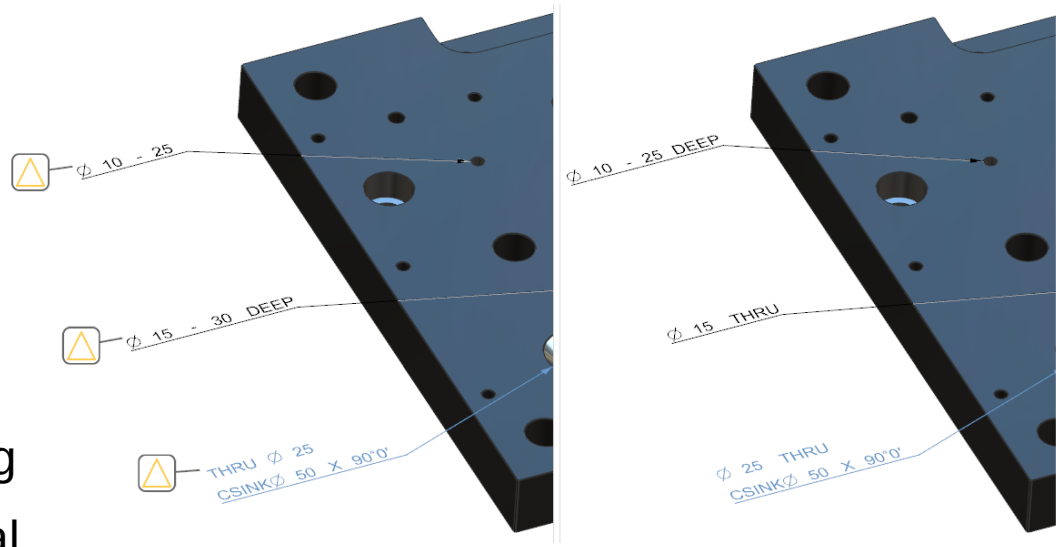

PMI Compare dramatically reduces PMI and model view checking time by quickly and easily identifying changes.

Unrestricted © Siemens AG 2020

Benefits of Model Based Definition Enhancements

SIEMENS
Ingenuity for life

- Improved collaboration connectivity across enterprise systems
- Effortless publishing of Technical Data Packages from NX
- Enhanced PMI Compare dramatically reduces PMI and model view checking time

Unrestricted © Siemens AG 2020

NX - Technical Data Package

SIEMENS

File Home View

Find a Command

New Template | Template Properties | Page | Viewport | View Carousel | View List | Rectangle | Text | PDF Form Field | General Table | Automatic Table | Image

Standard

Menu | No Selection Filter

Part Navigator

Name

Technical Data Package Template

Page 1 (Work-Active)

Dependencies

Details

Preview

bracket.prt | 3D PDF Beta Automatic PMI Table demo.prt

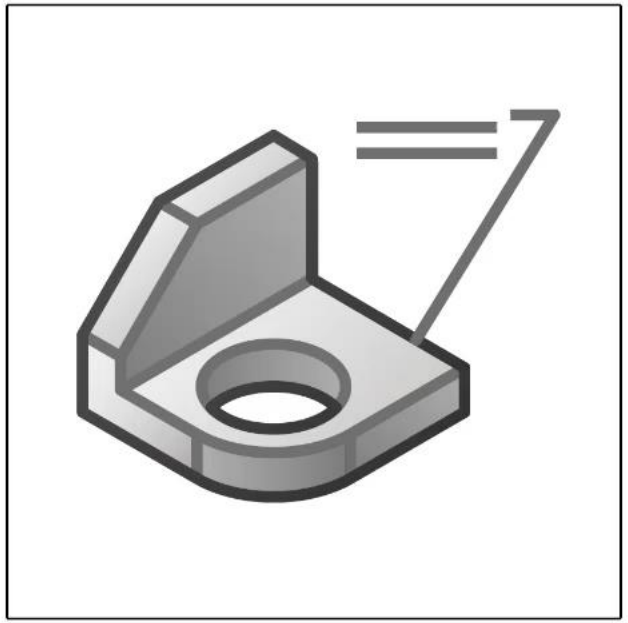

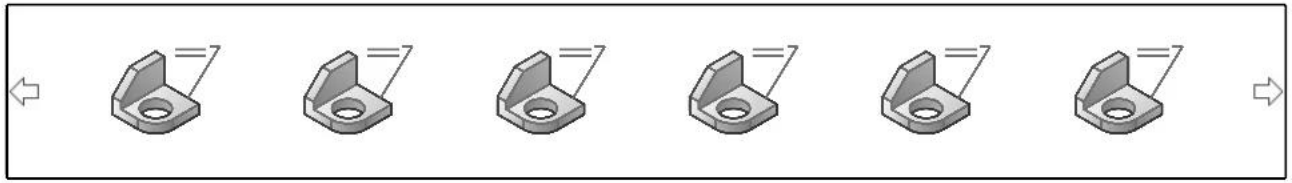

1

Fibersim

SIEMENS
Ingenuity for life

Forming for Designers

Fibersim 17 introduces forming capability focused on helping companies design parts for forming.

- Quickly assess producibility of numerous design concepts.
- Quickly reduce number of viable design concepts for further in depth analysis.

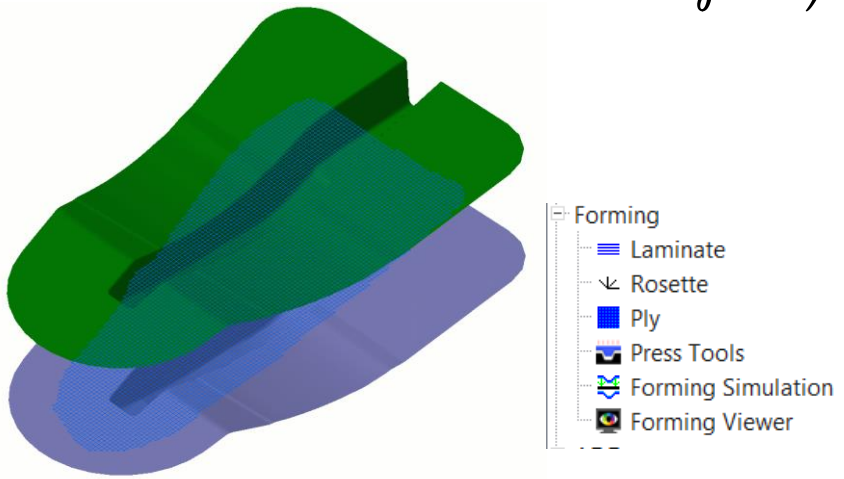

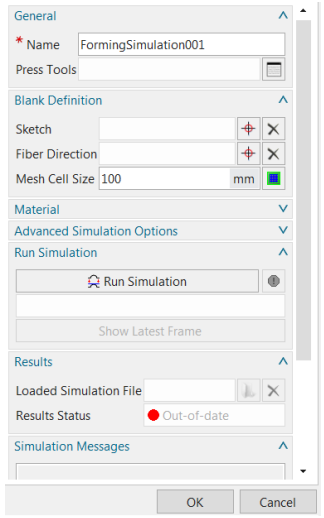

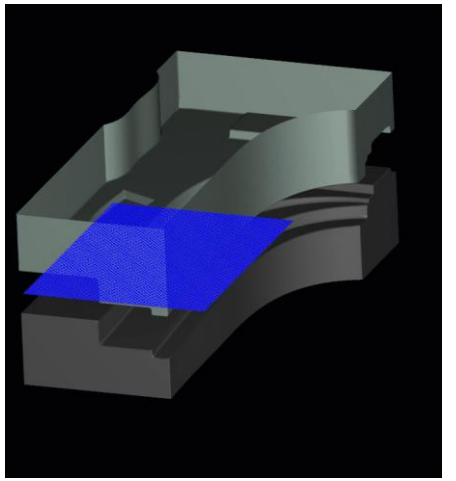

Quickly reduce number of viable design concepts for further in depth analysis.

Unrestricted © Siemens AG 2020

SIEMENS
Ingenuity for life

Topology Checker

Fibersim 16.1 adds a topology check to the design checker capability.

- Reduce perception of sensitivity to geometry quality with better tools to visualize actual issues

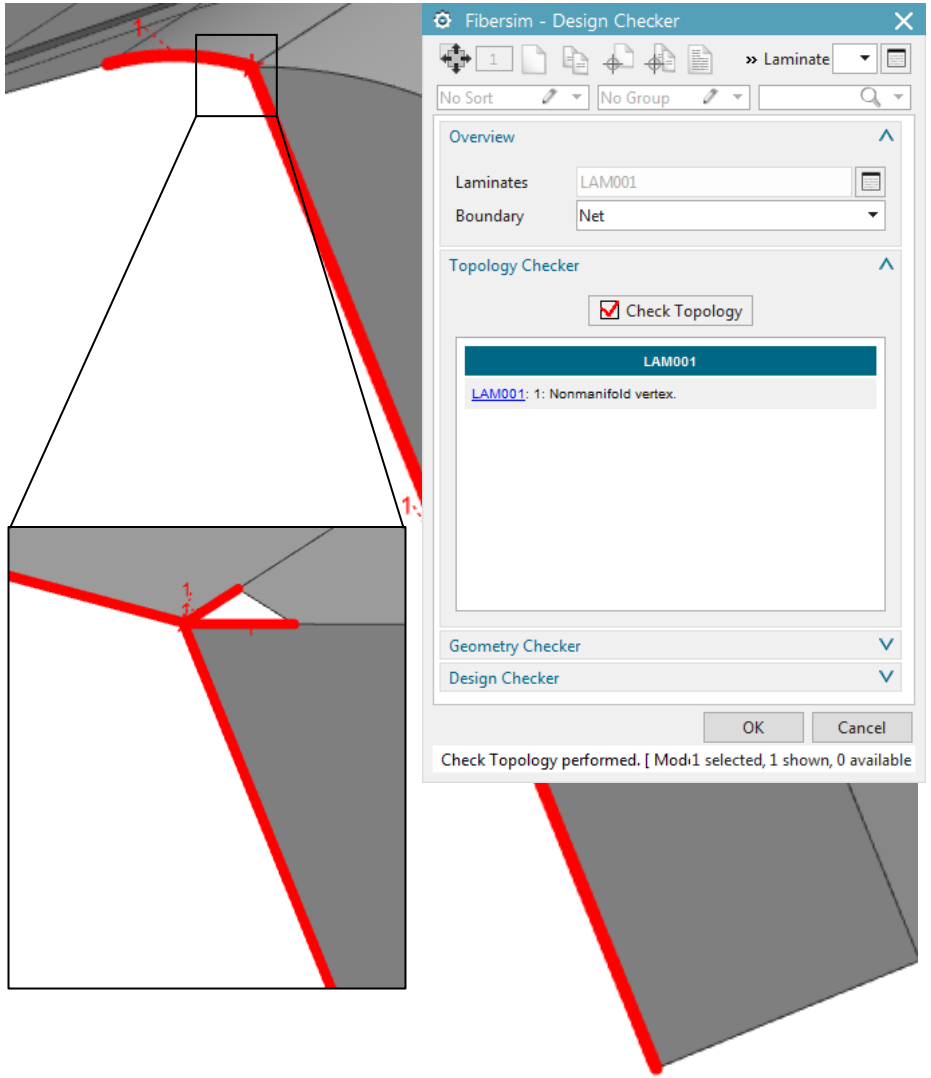

Quickly assess the topology of a surface and graphically identify invalid topology.

Unrestricted © Siemens AG 2020

Confidence in Collaboration

SIEMENS
Ingenuity for life

Effortlessly publish detailed technical data packages

- Greater control of published Technical Data Package content from NX along with support for additional viewing workflows.

Full Support of Teamcenter X

- New cloud PLM product with expertise bundled into SaaS offerings to bring customers immediate value and scale with their needs.

Unrestricted © Siemens AG 2020

Introducing Teamcenter X

SIEMENS
Ingenuity for life

Instant-on PLM

- We drive PLM, so you can drive your business
- Proven solutions for companies of all sizes
- Industry best practices built-in

Grows with You

- Grow when you're ready with most comprehensive PLM portfolio
- PLM SaaS solution with a mechanical, electrical, and software digital twin

Modern Cloud Platform

- Always up to date and ready
- AI and Machine learning
- Stand up new apps and integrations faster with Mendix

Years of industry experience bundled into a SaaS offering to get immediate results and grow as your needs evolve

Unrestricted © Siemens AG 2020

Winning Solutions, Technology, and Services
Coming Together

SIEMENS
Ingenuity for life

Teamcenter Rapid Start

Success with pre-configured quick start solutions for basic PLM, with room to grow

Managed Services

Expert deployments of Teamcenter in the cloud across any industry or company size

PaaS Cloud Platform

Evolution of Teamcenter with cloud-native microservice based architecture

Unrestricted © Siemens AG 2020

Intelligent Part Number for Create

SIEMENS
Ingenuity for life

Assign IPN to a new Item's Id created in NX.

Intelligent Part Number (IPN) enables a user to select values resulting in the generation of a smart part number when creating new items from NX.

- Configure your Id generator using BMIDE
- NX retrieves this information and prompts the user to select values when creating new items
- The properties associated with Id generation are shown above Item Id
- On auto-assign, the selected property values are sent to the Id generator resulting in a coded Id
- Includes Import assembly into Teamcenter

Enabling intelligent part number generation for new items created in NX.

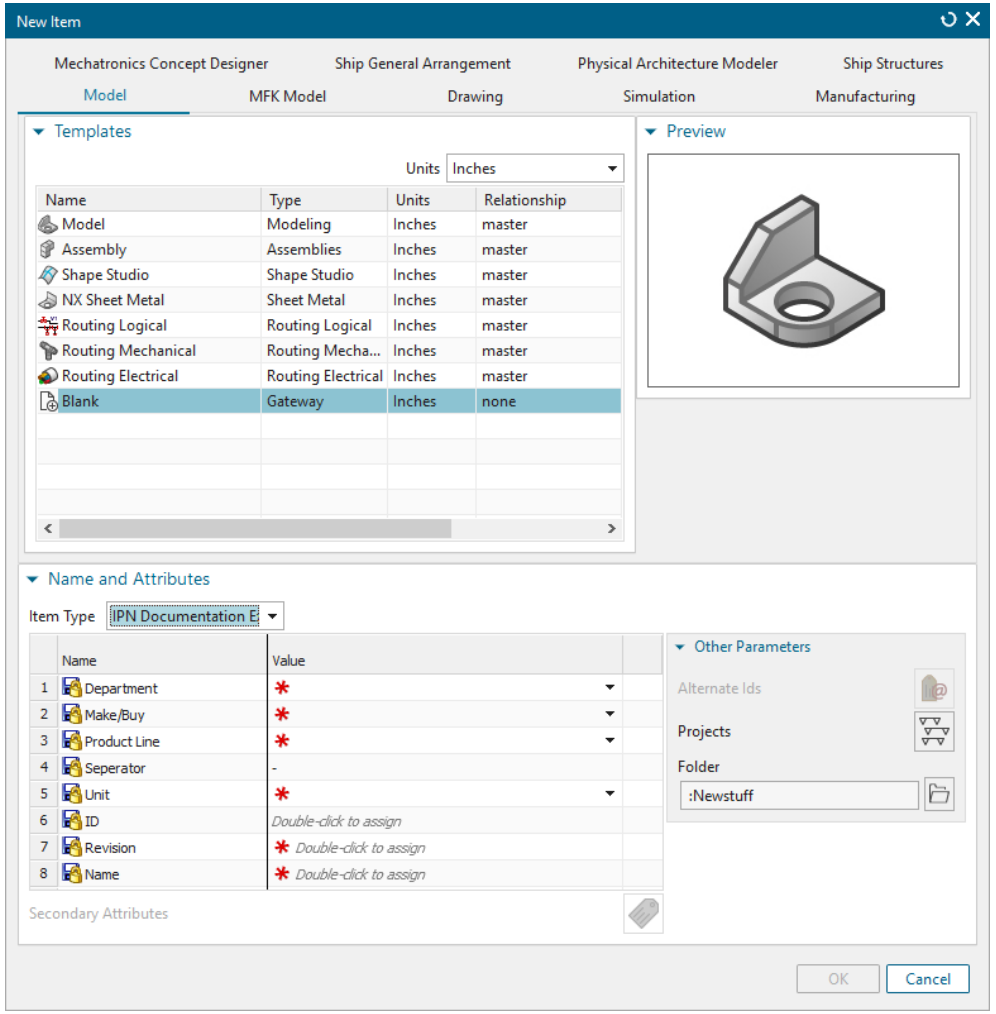

Unrestricted © Siemens AG 2020

Benefits of TCIN Enhancements

SIEMENS
Ingenuity for life

Teamcenter Integration for NX (TCIN)

- Full support of Teamcenter X in the cloud.
- Enhancing existing capabilities including export assembly UI and assign to Project and integrating intelligent part number functionality for create.

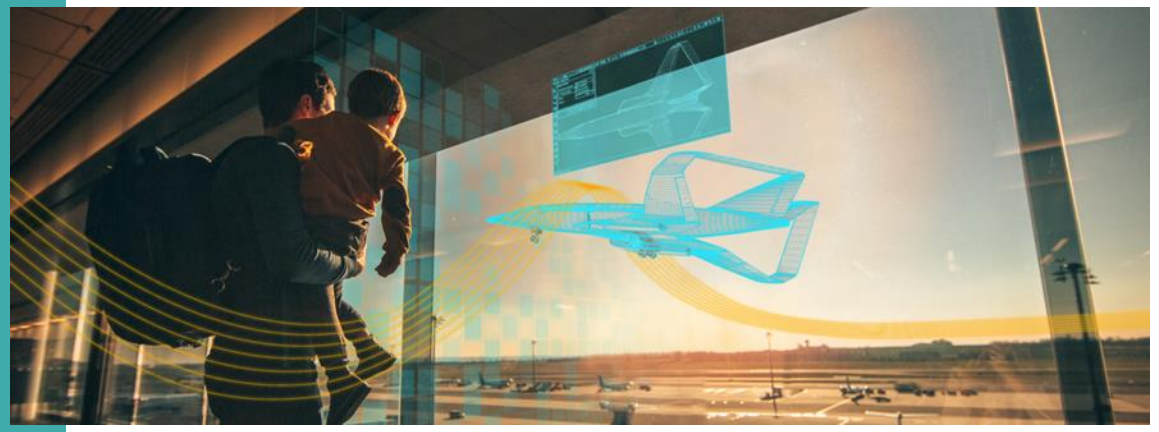

Unrestricted © Siemens AG 2020

NX: Breaking down the barriers to innovation

SIEMENS
Ingenuity for life

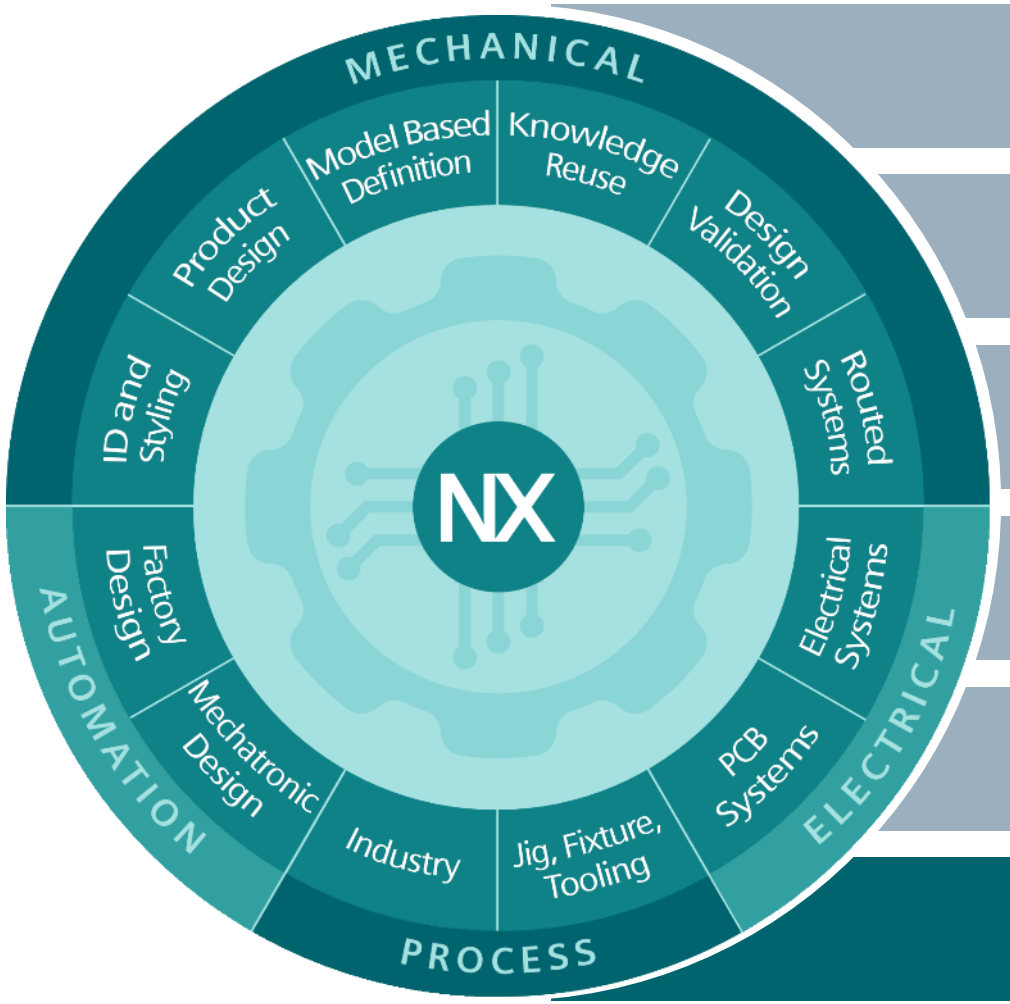

Most Productive Modeling Environment

Generative Engineering

Industrialized Additive Manufacturing

Electromechanical Design

Collaborative Design and Management

Integrated Simulation and Manufacturing

Unrestricted © Siemens AG 2020

Integrated Simulation and Manufacturing

SIEMENS
Ingenuity for life

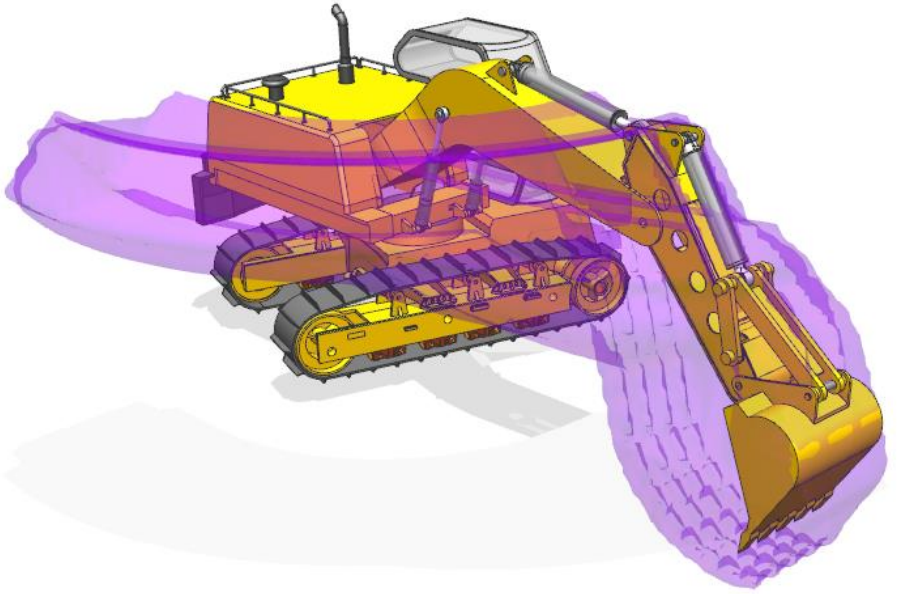

Deeply understand and effortlessly communicate designs.

Unrestricted © Siemens AG 2020

Animation Designer: Enhanced Inverse Kinematics

SIEMENS
Ingenuity for life

Set multiple travel points between start and end

- Control location and rotations
- Editable results
- Control over Euler angle conventions
- Nearly instant results
- Created motors can be edited independently to fine-tune motor speeds

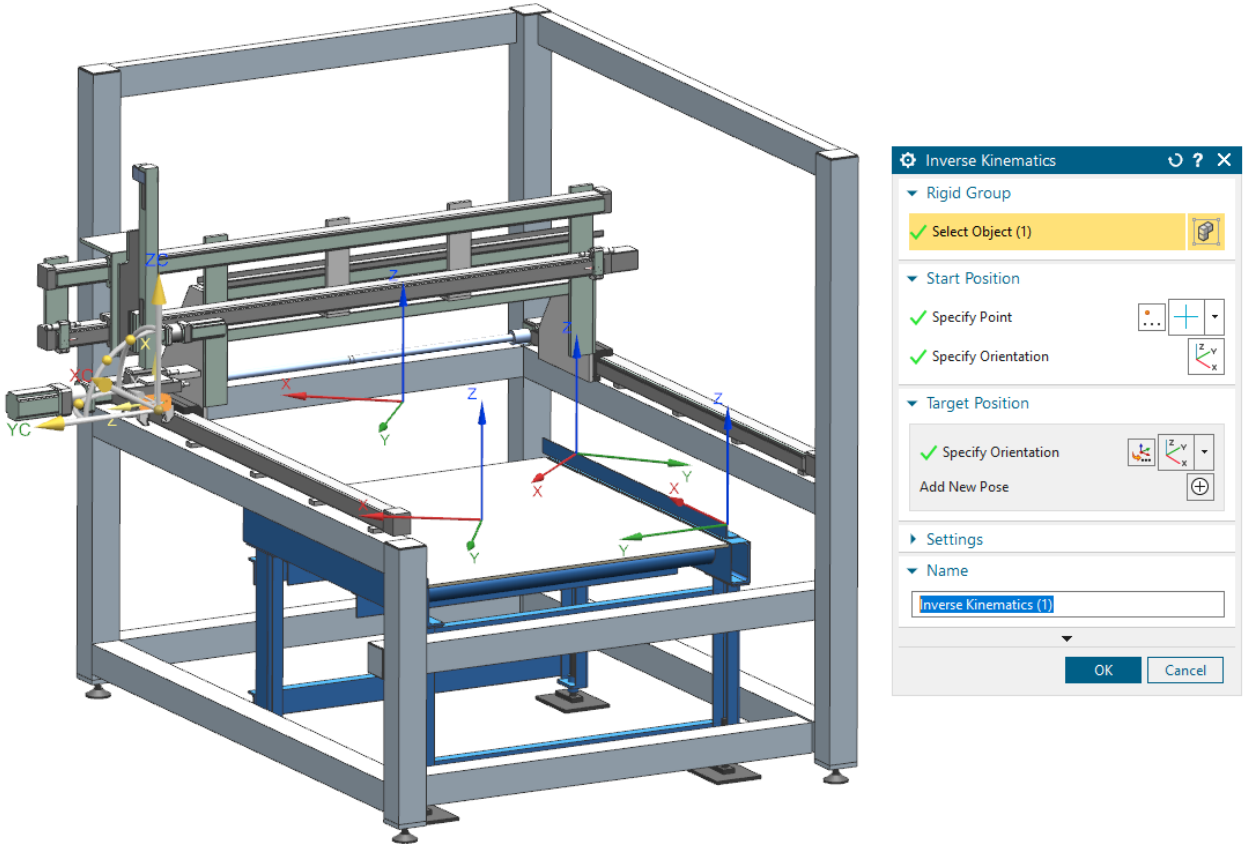

Unrestricted © Siemens AG 2020

Benefits of Animation Designer Enhancements

SIEMENS
Ingenuity for life

Animation Designer

- Automatically create complex motion paths so simulate realistic product articulation.
- Create distinct and visually effective product presentations to gain a competitive advantage.

Unrestricted © Siemens AG 2020

NX - Modeling

SIEMENS

File Home Assemblies Curve Analysis View Render Tools PMI Application Structure Welding Selection Animation Designer

lights

New Solution | Rigid Group | Contact — Define

Joint | Gear | Chain Belt | Rack and Pinion | Mechanical Cam — Relations

Position Motor | Speed Motor | Joint Jogger | Inverse Kinematics | Timeline — Motion

Restart | Play | Stop | Pause | Step | Repeat | Capture Arrangement | Export Movie — Animate

Motor Color | Move Rigid Group — Visualize

Collision | Pause on Collision | Lightweight — Analysis

Monitor | Graph | Envelope | Interference — Report

Adopt Assembly Constraints or Joints and Couplers | Export PLMXML to Process Simulate — Tools

Animated Visibility | Animated Explode | Animated Camera — Animated Effects

Menu | No Selection Filter | Entire Assembly

Animation Navigator

Name | Color | Ove

- Solutions
  - **Solution1**
    - Rigid Groups
      - Greifer (1)
      - Greifer (1)
      - PRODUCT_NA...
      - Rigid Group (1)
      - Rigid Group (2)
      - Rigid Group (3)
      - Rigid Group (4)
    - Joints
      - Fixed Joint (1)
      - Revolute Joint...
      - Slider Joint (1)
      - Slider Joint (2)
      - Slider Joint (3)
      - Slider Joint (4)
      - Slider Joint (5)
    - Couplers
    - Motors
    - Monitors
    - Animated Visibility
    - Animated Explode
    - Animated Camera
    - Joint Joggers

Dependencies

Welcome Page | _1926_Machine.prt

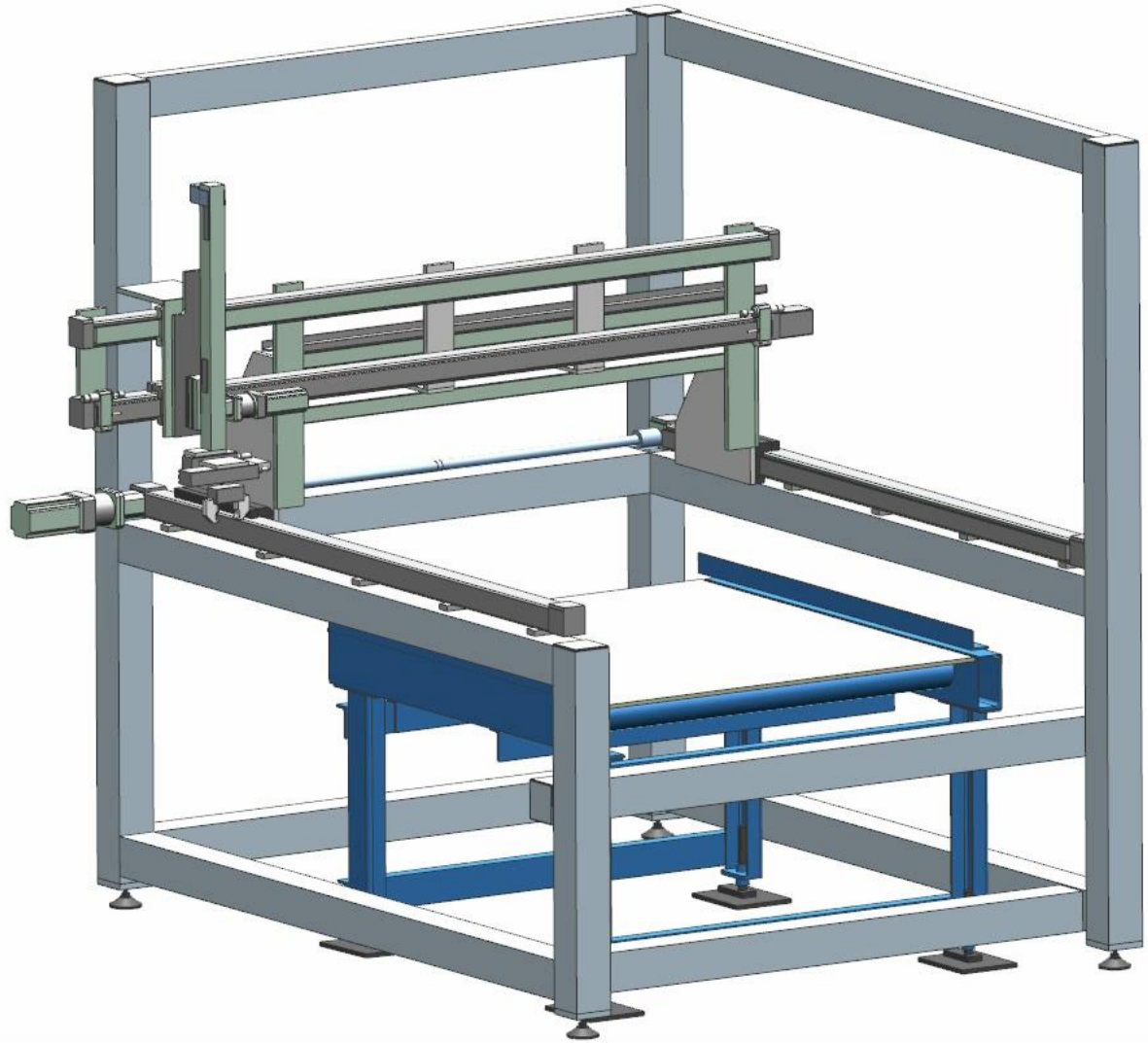

Select objects and use MB3, or double-click an object

Software Details

SIEMENS
Ingenuity for life

NX Animation Designer

- Enhancements available with NX 1926
- An add-on module, see NX30178
- Requires NX Mach Designer – or higher
- Post processing of exported videos will require a separate video editor (Adobe Premiere Elements, iMovie, etc.)

Unrestricted © Siemens AG 2020

NX removes the barriers to innovation

SIEMENS
Ingenuity for life

- Achieve cutting edge innovation with tools built from the ground-up as the next step in design evolution.
- Create better designs faster by naturally capturing ideas as you iterate.
- Create designs quickly and with confidence.
- Integrate the latest communication tools across your teams to enhance design understanding and decrease time to market.

Unrestricted © Siemens AG 2020

SIEMENS
Ingenuity for life

Thank you.
#IngenuityIsNX